KCM-DB
Duplex Bag Filter Housings

High-flow liquid filtration with Parallel Manifold assemblies (9 models). Continuous filtration during bag change-out with Valved Changeover assemblies (14 models). Aluminum, carbon steel, 304 / 316 SS and GFPP.



Two vessels / One bag per vessel / 23 housing configurations

Parallel Manifold

9 metal assemblies.

Valved Changeover

10 metal and 4 GFPP models.

Model Selection

Connections, bag sizes and seals.

© 2026 Kcmfilter

TECHNICAL CATALOG

Contents & Product Range

Duplex bag housings organized by piping configuration, vessel material and bag size.

Materials & documentation	03
Parallel manifold housings	04-06
Metal valved changeover housings	07-10
GFPP valved changeover housings	11-12
GFPP installation dimensions	13
Pressure, flow and filter media	14-15
Spare parts & model selection	16-17
Quotation information	18

Configuration	Vessels / Bags	Models
Parallel Manifold	2 vessels / 2 bags	9
Valved Changeover - Metal	2 vessels / 2 bags	10
Valved Changeover - GFPP	2 vessels / 2 bags	4

© 2026 Kcmfilter

MATERIALS & DOCUMENTATION

Technical Basis

Connection specifications, operating limits and order documentation serve different purposes.

Item	KCM-DB Range
Metal vessels	Aluminum, carbon steel, 304 SS or 316 SS, by model.
Thermoplastic vessels	GFPP vessels with CPVC end connectors and linked three-way valves.
Bag capacity	Two vessels; one filter bag and support basket in each vessel.
Connections	2" or 3" NPT; 2" (DN50), 3" (DN80) or 4" (DN100) flanges.
Seals	NBR (Buna-N), EPDM or FKM, as listed for the selected model.

Connection standards

NPT identifies the thread form. Inch and DN values identify nominal bore. Flange drilling, facing and pressure class are separate order specifications; a nominal DN designation does not establish interchangeability.

Pressure & documentation

The complete assembly is limited by its vessels, valves, connectors, seals and operating temperature. Material certificates, pressure-test records and any applicable code documentation are identified in the agreed supply documents.

Selection basis

State the process liquid, concentration, temperature, flow, allowable differential pressure and installation arrangement. Size a changeover assembly for the required flow through one operating vessel.

© 2026 Kcmfilter

PARALLEL MANIFOLD / 9 MODELS

Parallel Manifold Housings

Two single-bag vessels share inlet and outlet manifolds. Changeover valves and isolation piping are separate from this configuration.



Representative stainless steel flanged assembly

Vessels

One size #2 filter bag per vessel; two bags per assembly.

Materials

Aluminum, carbon steel, 304 SS or 316 SS.

Connections

2" or 3" NPT; 2" (DN50) or 3" (DN80) flanged.

Common manifolds

Both chambers can receive flow in normal parallel service. The separate valve and piping design determines whether either chamber can be isolated for maintenance.

© 2026 Kcmfilter

PARALLEL MANIFOLD

Parallel Model Selection

Each listed assembly holds two size #2 bags. The complete KCM part number opens its product page.

KCM Part Number	Bag Size	Housing	Process Connection	Seal
KCM-DB-AL-0001	#2	Aluminum	2" NPT	Buna-N
KCM-DB-AL-0002	#2	Aluminum	3" NPT	Buna-N
KCM-DB-CS-0001	#2	Carbon Steel	2" (DN50) Flange	Buna-N
KCM-DB-CS-0002	#2	Carbon Steel	2" NPT	FKM
KCM-DB-CS-0003	#2	Carbon Steel	3" (DN80) Flange	Buna-N
KCM-DB-CS-0004	#2	Carbon Steel	3" (DN80) Flange	FKM
KCM-DB-S304-0001	#2	304 SS	2" (DN50) Flange	Buna-N
KCM-DB-S304-0002	#2	304 SS	2" NPT	Buna-N
KCM-DB-S316-0001	#2	316 SS	3" (DN80) Flange	Buna-N



NPT manifold arrangement

Threaded process connections are listed for the two aluminum models, CS-0002 and S304-0002. Vessel materials and seals follow the table.

© 2026 Kcmfilter

PARALLEL MANIFOLD / INSTALLATION

Flow & Basket Geometry

Parallel flow and per-basket reference dimensions. The drawing is schematic; it does not establish an assembly mounting envelope.

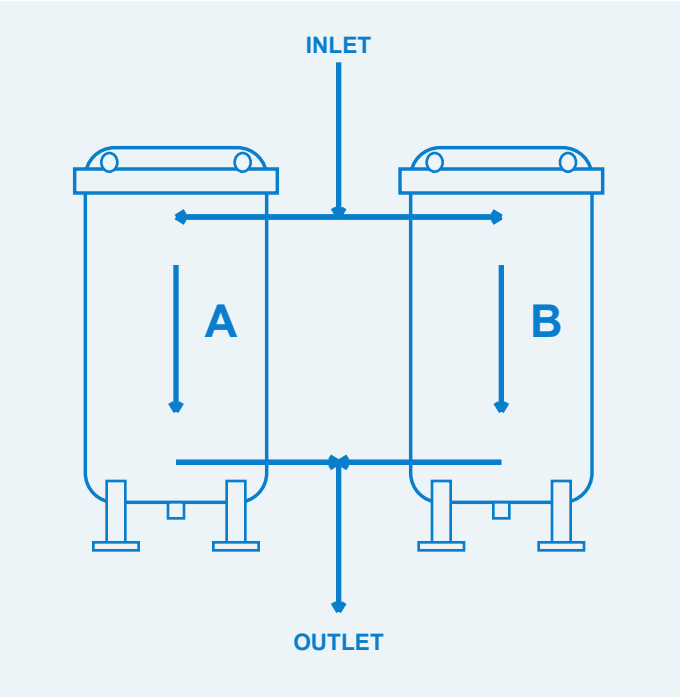

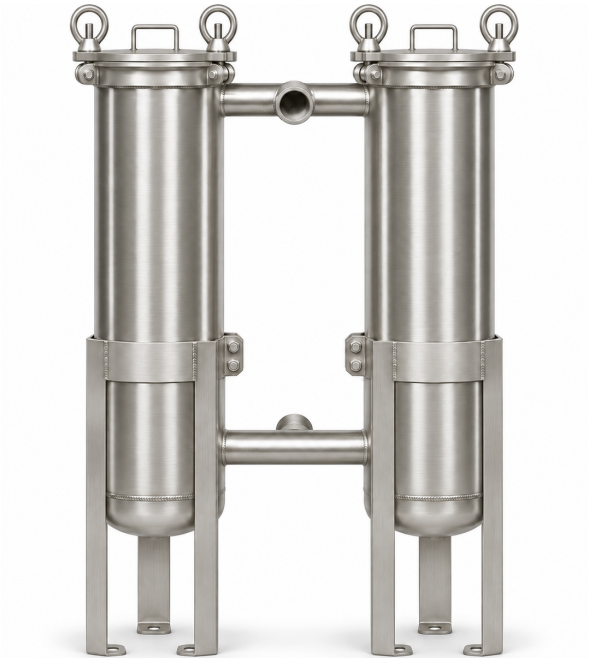

Representative NPT assembly

Housing-only flow reference: up to 440 US gpm (99.9 m³/h), before bag and process-fluid losses.

Bag Size	Basket Depth	Basket Diameter	Area / Basket	Volume / Basket
#2	30" (762 mm)	6.7" (170 mm)	4.4 ft² (0.409 m²)	1,000 in³ (16.4 L)

Installation dimensions

The ordered manifold orientation, mounting footprint, cover access and basket-withdrawal space are defined by the assembly drawing. Basket depth is not overall vessel height.

© 2026 Kcmfilter

VALVED CHANGEOVER / 10 METAL MODELS

Metal Changeover Housings

Two single-bag vessels are supplied with a changeover valve assembly. One chamber can carry the process flow while the other is isolated for service.



Vessels	Bag Size	Housing Material	Connections
2 / one bag each	#1 or #2	Carbon Steel / 304 SS / 316 SS	2" NPT; 2"-4" (DN50-DN100) flanged

Select the operating chamber for full required flow. The actual valve sequence, venting and pressure equalization depend on the supplied assembly and its operating instructions.

© 2026 Kcmfilter

VALVED CHANGEOVER / FLOW PATHS

A / B Operating Paths

Functional flow paths for a duplex changeover assembly. These diagrams show operating states, not valve-handle positions or a piping isometric.

A IN SERVICE

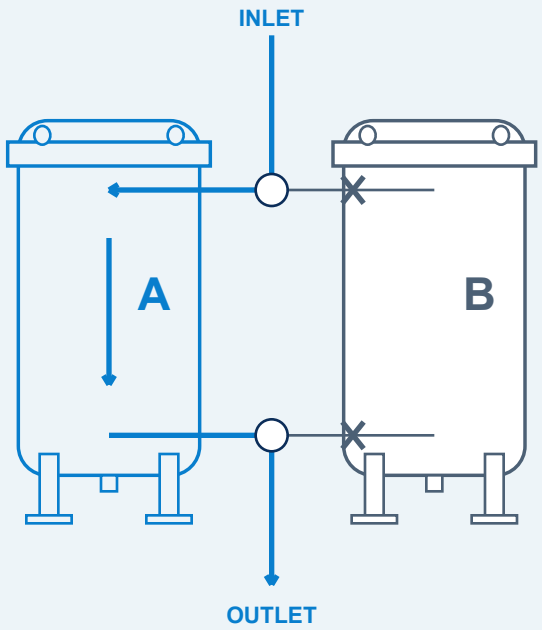

Blue: flowing / Gray: isolated

B IN SERVICE

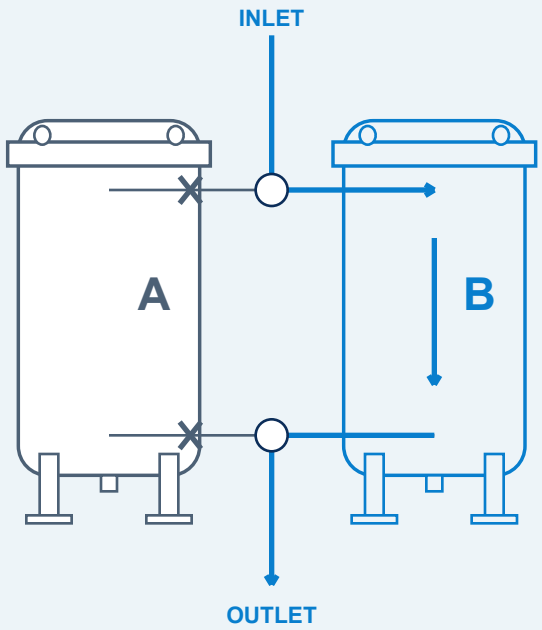

Blue: flowing / Gray: isolated

Changeover duty

The standby vessel needs a clean bag, a seated basket and a closed cover before transfer. The operating vessel must carry the specified process flow without exceeding the allowable differential pressure.

Service isolation

Isolate, depressurize and drain the chamber before opening its cover. A valve-handle indication alone does not establish zero pressure.

© 2026 Kcmfilter

METAL CHANGEOVER / SIZE #1

Size #1 Metal Housings

Two 304 stainless steel configurations with one size #1 bag per vessel and Buna-N seals.



Linked-valve arrangement

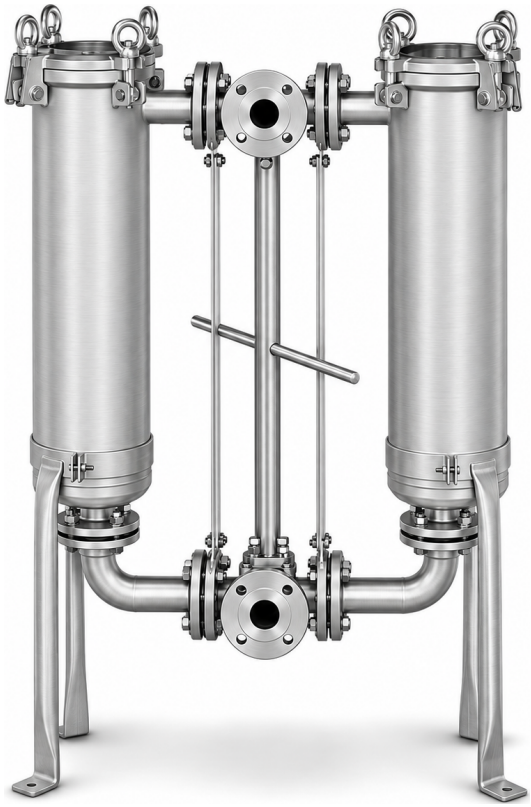

Elbow and linked-valve arrangement

KCM Part Number	Bag Size	Housing	Process Connection	Seal
KCM-DB-S304-0003	#1	304 SS	2" NPT	Buna-N
KCM-DB-S304-0004	#1	304 SS	4" (DN100) Flange	Buna-N

Representative valve arrangements; vessel lengths vary by model.

© 2026 Kcmfilter

METAL CHANGEOVER / SIZE #2

Size #2 Metal Housings

Eight configurations in carbon steel, 304 SS or 316 SS. Two bags per assembly; one bag per operating chamber.

KCM Part Number	Bag Size	Housing	Process Connection	Seal
KCM-DB-CS-0005	#2	Carbon Steel	2" (DN50) Flange	Buna-N
KCM-DB-S304-0005	#2	304 SS	2" (DN50) Flange	Buna-N
KCM-DB-S304-0006	#2	304 SS	2" NPT	Buna-N
KCM-DB-S304-0007	#2	304 SS	3" (DN80) Flange	Buna-N
KCM-DB-S304-0008	#2	304 SS	4" (DN100) Flange	Buna-N
KCM-DB-S316-0002	#2	316 SS	2" (DN50) Flange	Buna-N
KCM-DB-S316-0003	#2	316 SS	2" (DN50) Flange	EPDM
KCM-DB-S316-0004	#2	316 SS	2" NPT	Buna-N



Configuration details

S304-0008 includes the recorded elbow arrangement. Other manifold orientations and the actual service clearances follow the ordered assembly drawing.

© 2026 Kcmfilter

VALVED CHANGEOVER / 4 GFPP MODELS

GFPP Duplex Bag Housings

Glass-reinforced polypropylene vessels, CPVC flanged end connectors, linked three-way changeover valves and FKM seals.



Size #1 / 16" (406 mm) bags



Size #2 / 32" (813 mm) bags

KCM Part Number	Bag Size	Housing	Process Connection	Seal
KCM-DB-GPP-0001	#1	GFPP	2" (DN50) Flange	FKM
KCM-DB-GPP-0002	#2	GFPP	3" (DN80) Flange	FKM
KCM-DB-GPP-0003	#2	GFPP	4" (DN100) Flange	FKM
KCM-DB-UN-0001	#2	GFPP	2" (DN50) Flange	FKM

Each assembly contains two vessels and two bags. Photos show representative union arrangements.

© 2026 Kcmfilter

GFPP / COMPONENTS

Vessels, Valves & Unions

The inlet and outlet valves divert flow together. Union connections separate the vessels from the manifold for service.



Cover & vent

Removable handled cover with a cover-mounted vent.

GFPP vessel

One bag and support basket per chamber.

CPVC three-way valves

Upper inlet and lower outlet change over through a linked drive.

Union connectors

End connectors and assembly nuts connect the manifold to each vessel.

Mounting base

Both vessels are secured to a shared mounting platform.

Pressure measurement

Upstream and downstream pressure points support differential-pressure monitoring. Gauges, switches and gauge guards are selected for the actual assembly.

© 2026 Kcmfilter

GFPP / INSTALLATION DATA

Installation Dimensions

Reference dimensions for the four flanged GFPP configurations below. C = width; E = overall height; D = process-port centerline; H = basket-removal clearance.

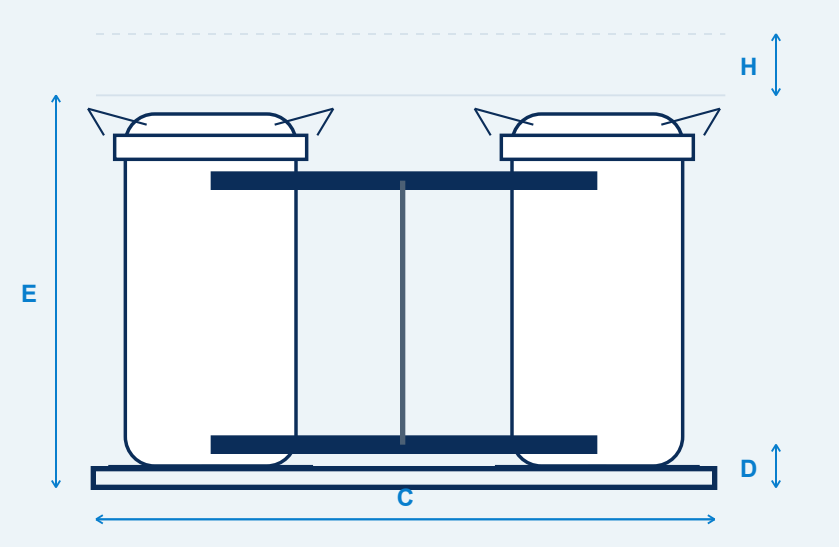

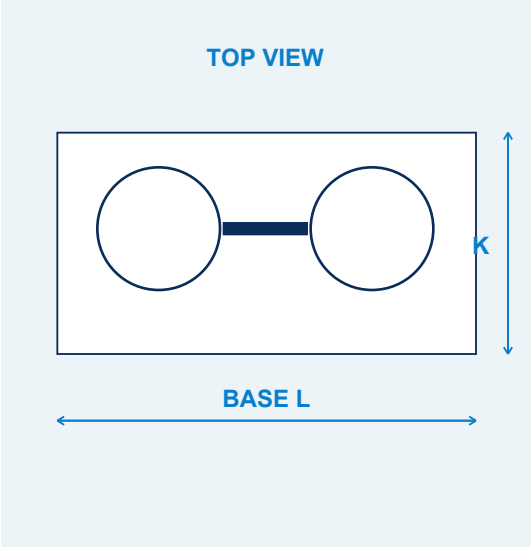

KCM Part Number	Port	C	E	D	H	Base L x K
KCM-DB-GPP-0001	2"	47.44" (1,205 mm)	31.83" (808 mm)	4.50" (114 mm)	15.25" (387 mm)	48.00 x 16.75" (1,219 x 425 mm)
KCM-DB-GPP-0002	3"	55.17" (1,401 mm)	47.83" (1,215 mm)	4.50" (114 mm)	31.25" (794 mm)	48.00 x 16.75" (1,219 x 425 mm)
KCM-DB-GPP-0003	4"	55.17" (1,401 mm)	47.83" (1,215 mm)	4.50" (114 mm)	31.25" (794 mm)	48.00 x 16.75" (1,219 x 425 mm)
KCM-DB-UN-0001	2"	47.44" (1,205 mm)	47.83" (1,215 mm)	4.50" (114 mm)	31.25" (794 mm)	48.00 x 16.75" (1,219 x 425 mm)

The vertical installation envelope is E + H: 47.08" (1,196 mm) for the short assembly and 79.08" (2,009 mm) for the long assembly. Diagrams are schematic; dimensions apply to the stated reference configurations.

© 2026 Kcmfilter

OPERATING DATA / METAL & GFPP

Pressure & Flow

Pressure class, temperature limits and flow capacity are separate selection criteria. Valved changeover duty is sized for one operating vessel.

Metal assemblies / 19 models

Configuration	Pressure Class	Housing-Only Flow Reference
Parallel Manifold / 9 models	150 psi (10.3 bar)	Up to 440 US gpm (99.9 m³/h) Both vessels operating
Flanged Valved Changeover / 7 models	150 psi (10.3 bar)	Up to 220 US gpm (50.0 m³/h) Per operating vessel
NPT Valved Changeover / 3 models	150 psi (10.3 bar)	Model-specific hydraulic selection

Metal pressure classes identify the listed configurations. Allowable pressure at operating temperature depends on the vessel, seals and valves. The 440 / 220 US gpm values are housing-only family references, not installed-bag duty ratings.

GFPP vessels with CPVC manifolds / 4 models

KCM Part Number	Reference Pressure / Temperature	Listed Maximum Flow
KCM-DB-GPP-0001	150 psi (10.3 bar) at 70°F (21°C)	100 US gpm (22.7 m³/h)
KCM-DB-GPP-0002	150 psi (10.3 bar) at 70°F (21°C)	150 US gpm (34.1 m³/h)
KCM-DB-GPP-0003	150 psi (10.3 bar) at 70°F (21°C)	150 US gpm (34.1 m³/h)
KCM-DB-UN-0001	150 psi (10.3 bar) at 70°F (21°C)	100 US gpm (22.7 m³/h)

GFPP data apply to non-shock liquid service; allowable pressure decreases with temperature. Pipe size, bag media, viscosity and solids loading affect flow and pressure loss. Vessel pressure rating is not the bag change-out differential pressure.

© 2026 Kcmfilter

FILTER BAGS / MEDIA SELECTION

Filter Bags & Support Baskets

Bag size, ring geometry and basket seating define the mechanical fit. Micron rating and media construction define the filtration duty.



NEEDLED FELT

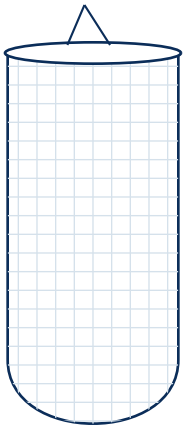

MONOFILAMENT MESH

Depth filtration

Needled felt captures particles through a fibrous structure. PP and polyester are common media choices.

Surface filtration

Monofilament mesh uses defined openings to retain particles at the surface. PP and nylon are common choices.

Model Group	Bag / Basket Reference	Selection Detail
Metal parallel	Size #2 / nominal 30" basket depth	Do not substitute basket depth for bag length.
Metal changeover	Size #1 or #2, as listed	Ring and collar geometry follow the model.
GFPP changeover	#1: 7" × 16" (178 × 406 mm) #2: 7" × 32" (178 × 813 mm)	Choose the specified bag length and sealing ring.

A support basket carries the bag against differential pressure. Bag media, seams, ring material and seals are selected for the process liquid and temperature.

© 2026 Kcmfilter

SERVICE COMPONENTS

Spare Parts & Maintenance

Order parts with the complete housing part number, serial number when available, and the component description.

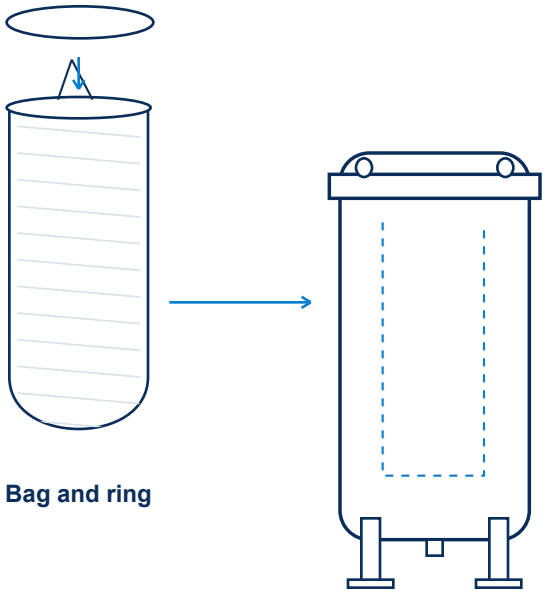

Bag and ring

Basket inside vessel

Before opening

Isolate, depressurize and drain the vessel. Follow the supplied assembly instructions.

During change-out

Clean the seating surfaces and inspect the cover seal, bag ring and basket. Replace damaged components.

Component	Identification Required
Filter bag	Bag size, actual dimensions, micron rating, media and ring.
Support basket	Housing model, basket length, collar and perforation or mesh.
Cover seal / O-ring	Housing model, seal location, compound and dimensions.
Valve or union parts	Valve body size, connector material and end-connection type.
Gauges / DP instruments	Port size, pressure range and process compatibility.

© 2026 Kcmfilter

ORDERING INFORMATION

Model Selection Index

23 assemblies. Two vessels and two bags per assembly; each complete part number links to its KCM product page.

KCM Part Number	Piping	Bag Size	Housing	Process Connection	Seal
KCM-DB-AL-0001	Parallel	#2	Aluminum	2" NPT	Buna-N
KCM-DB-AL-0002	Parallel	#2	Aluminum	3" NPT	Buna-N
KCM-DB-CS-0001	Parallel	#2	Carbon Steel	2" (DN50) Flange	Buna-N
KCM-DB-CS-0002	Parallel	#2	Carbon Steel	2" NPT	FKM
KCM-DB-CS-0003	Parallel	#2	Carbon Steel	3" (DN80) Flange	Buna-N
KCM-DB-CS-0004	Parallel	#2	Carbon Steel	3" (DN80) Flange	FKM
KCM-DB-S304-0001	Parallel	#2	304 SS	2" (DN50) Flange	Buna-N
KCM-DB-S304-0002	Parallel	#2	304 SS	2" NPT	Buna-N
KCM-DB-S316-0001	Parallel	#2	316 SS	3" (DN80) Flange	Buna-N
KCM-DB-CS-0005	Valved	#2	Carbon Steel	2" (DN50) Flange	Buna-N
KCM-DB-S304-0003	Valved	#1	304 SS	2" NPT	Buna-N
KCM-DB-S304-0004	Valved	#1	304 SS	4" (DN100) Flange	Buna-N
KCM-DB-S304-0005	Valved	#2	304 SS	2" (DN50) Flange	Buna-N
KCM-DB-S304-0006	Valved	#2	304 SS	2" NPT	Buna-N
KCM-DB-S304-0007	Valved	#2	304 SS	3" (DN80) Flange	Buna-N
KCM-DB-S304-0008	Valved	#2	304 SS	4" (DN100) Flange	Buna-N
KCM-DB-S316-0002	Valved	#2	316 SS	2" (DN50) Flange	Buna-N
KCM-DB-S316-0003	Valved	#2	316 SS	2" (DN50) Flange	EPDM
KCM-DB-S316-0004	Valved	#2	316 SS	2" NPT	Buna-N
KCM-DB-GPP-0001	Valved	#1	GFPP	2" (DN50) Flange	FKM
KCM-DB-GPP-0002	Valved	#2	GFPP	3" (DN80) Flange	FKM
KCM-DB-GPP-0003	Valved	#2	GFPP	4" (DN100) Flange	FKM
KCM-DB-UN-0001	Valved	#2	GFPP	2" (DN50) Flange	FKM

NPT is the thread form. Inch / DN pairs are nominal flange sizes; drilling and facing follow the ordered connection.

© 2026 Kcmfilter

SALES & ENGINEERING

Request a Quotation

Send the model and process requirements for the housing, valves, filter bags and installation.

01 Housing configuration

KCM part number and quantity; Parallel Manifold or Valved Changeover; housing material, bag size and seal compound.

02 Process conditions

Liquid and concentration, operating and design temperature, operating pressure, normal and peak flow, viscosity, solids loading and filtration rating.

03 Piping & installation

Connection bore, flange standard and facing or thread form; external inlet and outlet orientation, mounting footprint and service clearance.

04 Bags, spares & documents

Filter media and ring, basket specification, gauges and spare seals; required inspection records, material documents and approved assembly drawing.

Published specifications apply to the stated configurations and operating conditions; final supply is defined by the agreed quotation and approved drawings.

Contact Kcmfilter

sales@kcmfilter.com

+1 (934) 234-9228

© 2026 Kcmfilter