KCM-MC Band-Clamp Multi-Cartridge Filter Housings

Global Filter GTCHB Cross-Reference | 4 to 22 Cartridges | 304 & 316 SS



Closure & Internals

Band, seal and cartridge retention.

Model Selection

19 linked KCM configurations.

Cross-Reference

10 Global Filter references.

© 2026 Kcmfilter

CONTENTS

Selection Guide

Cartridge capacity, cover construction and connection details for the listed Band-Clamp housings.

Range, materials and seals	03-04
Cover assembly and band-clamp closure	05-06
Cartridge end fittings and retention	07
Capacity photographs and model selection	08-12
Reference dimensions and mounting	13-16
Pressure, temperature and flow	17
Service parts and maintenance	18
Complete KCM model index	19
OEM Cross-Reference Guide	20
Ordering guide and quotation	21-22

Full model catalog:
kcmfilter.com/series/kcm-mc-band-clamp-multi-cartridge-filter-housings

© 2026 Kcmfilter

SERIES OVERVIEW

Range at a Glance

One band-clamp vessel holds multiple standard-diameter filter cartridges. Capacity and nominal element length identify the first selection step.

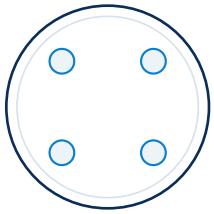

4 cartridges

5 models

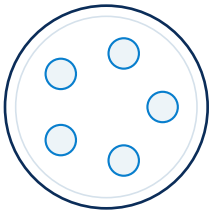

5 cartridges

6 models

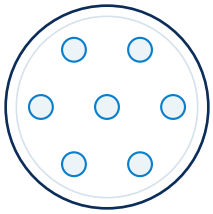

7 cartridges

3 models

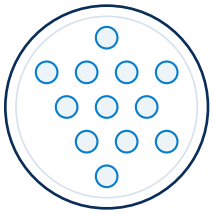

12 cartridges

3 models

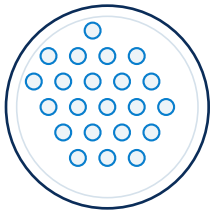

22 cartridges

2 models

Capacity diagrams show cartridge count only; they are not manufacturing hole patterns.

Selection Item	Listed Range
Cartridge capacity	4 / 5 / 7 / 12 / 22 per vessel
Nominal element length	10 / 20 / 30 / 40 in. (254 / 508 / 762 / 1,016 mm)
Process connections	2" NPT / MNPT / FNPT; 3" (DN80) and 4" (DN100) flanges
Housing materials	304 SS / 316 SS, by KCM part number
Cover closure	Band clamp with separate perimeter seal

Typical duties: process water, RO prefiltration and compatible industrial liquids. Filtration media, micron rating and cartridge end style are selected for the liquid and contaminant.

© 2026 Kcmfilter

CONSTRUCTION

Materials & Seals

Housing material, perimeter seal and cartridge end seals are separate items in the assembly specification.

Component	Listed Configuration
Housing body	304 SS or 316 SS, per individual model
Cover closure	Band, threaded fastener and mating rims
Cover seal	NBR (Buna-N), EPDM or FKM, as listed
Cartridge retention	Hold-down plate, posts and/or springs, matched to the cartridge end style
Process ports	Threaded connections or flanges, by model

Material identification

Select 304 SS or 316 SS from the model table. Material certificates, where specified, identify the alloy and traceability of the delivered pressure boundary.

Seal specification

The model tables identify the selected cover-seal compound. Cartridge gaskets and O-rings are specified with the filter elements.

Documentation

Pressure-vessel code requirements, material certificates, inspection and required marking form part of the quoted assembly specification.

© 2026 Kcmfilter

COVER CONSTRUCTION

Exploded Cover Assembly

The band retains the cover at the vessel rim; the perimeter seal closes the cover-to-body joint.



Band clamp

Wraparound band and closure fastener.

Domed cover

Removable cover with a top service port.

Perimeter seal

Seal at the vessel rim, outside the cartridge hold-down.

Retention assembly

Plate and threaded retainers support the cartridge pack.

Assembly illustration. Internal positions in this view are not a capacity specification.

© 2026 Kcmfilter

CLOSURE DETAILS

Band-Clamp Closure

The clamp profile engages the cover and body rims. The threaded fastener draws the band into its closed position.



Band and rims

The contact profile carries the closure load.

Fastener and pivot

Threads, pins and latch parts form the closure assembly.

Seal joint

The cover seal is separate from the band hardware.



Opening the vessel

Isolate, drain and fully depressurize before releasing the closure. Support the cover and follow the instructions for the delivered assembly.

© 2026 Kcmfilter

FILTER ELEMENT FIT

Cartridge End Fittings

DOE, 222/Flat and 222/Fin elements use different end-sealing and retention arrangements.



Four-position assembly shown with one cartridge installed and three open support tubes.

DOE

Double open ends. End gaskets seal against the seat and spring-loaded cap.

222/Flat

Two O-rings at the open end with a flat closed end.

222/Fin

Two O-rings at the open end with a fin at the closed end.

Element Detail	Order Specification
Length and diameter	Nominal and actual length; outside diameter
End fitting	DOE / 222/Flat / 222/Fin; end-seal material
Hold-down system	Seat cups, caps, springs and plate geometry

© 2026 Kcmfilter

CAPACITY & MODEL SELECTION

4-Cartridge Housings

5 configurations. Nominal cartridge length, housing material, process connection and cover seal are listed for each part number.



Four-position assembly; one cartridge installed.

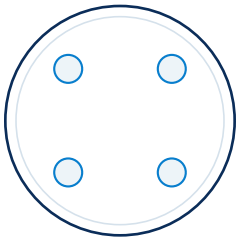

4 elements per vessel

Capacity schematic

KCM Part Number	Cartridges / Length	Material	Process Connection	Seal
KCM-MC-S304-0029	4 x 10 in. (254 mm)	304 SS	2" FNPT	EPDM
KCM-MC-S304-0003	4 x 20 in. (508 mm)	304 SS	2" MNPT	FKM
KCM-MC-S304-0061	4 x 20 in. (508 mm)	304 SS	2" MNPT	Buna-N
KCM-MC-S304-0062	4 x 30 in. (762 mm)	304 SS	2" MNPT	Buna-N
KCM-MC-S316-0009	4 x 30 in. (762 mm)	316 SS	2" MNPT	EPDM

© 2026 Kcmfilter

CAPACITY & MODEL SELECTION

5-Cartridge Housings

6 configurations. Nominal cartridge length, housing material, process connection and cover seal are listed for each part number.



Closed band-clamp joint detail. Internal capacity is not shown.

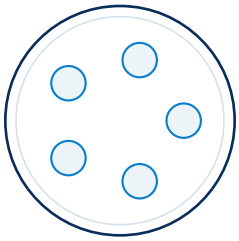

5 elements per vessel

Capacity schematic

KCM Part Number	Cartridges / Length	Material	Process Connection	Seal
KCM-MC-S316-0069	5 x 10 in. (254 mm)	316 SS	2" MNPT	Buna-N
KCM-MC-S304-0004	5 x 20 in. (508 mm)	304 SS	2" MNPT	FKM
KCM-MC-S304-0063	5 x 20 in. (508 mm)	304 SS	2" MNPT	Buna-N
KCM-MC-S316-0010	5 x 20 in. (508 mm)	316 SS	2" MNPT	EPDM
KCM-MC-S316-0070	5 x 20 in. (508 mm)	316 SS	2" MNPT	Buna-N
KCM-MC-S304-0064	5 x 30 in. (762 mm)	304 SS	2" MNPT	Buna-N

© 2026 Kcmfilter

CAPACITY & MODEL SELECTION

7-Cartridge Housings

3 configurations. Nominal cartridge length, housing material, process connection and cover seal are listed for each part number.



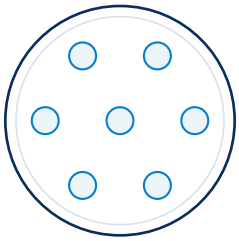

7 elements per vessel

Capacity schematic

Representative construction; model data below.

KCM Part Number	Cartridges / Length	Material	Process Connection	Seal
KCM-MC-S304-0005	7 x 20 in. (508 mm)	304 SS	2" FNPT	EPDM
KCM-MC-S304-0031	7 x 20 in. (508 mm)	304 SS	2" FNPT	EPDM
KCM-MC-S304-0065	7 x 30 in. (762 mm)	304 SS	2" MNPT	Buna-N

7 x 20 in. configuration details

KCM-MC-S304-0005: standard glass-bead finish (Ref.). KCM-MC-S304-0031: electropolished finish, 3/4" MNPT drains and 1/4" FNPT gauge ports. MNPT and FNPT denote male and female threads.

© 2026 Kcmfilter

CAPACITY & MODEL SELECTION

12-Cartridge Housings

3 configurations. Nominal cartridge length, housing material, process connection and cover seal are listed for each part number.



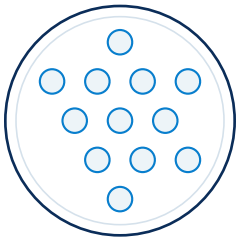

12 elements per vessel

Capacity schematic

Representative construction; model data below.

KCM Part Number	Cartridges / Length	Material	Process Connection	Seal
KCM-MC-S304-0059	12 x 30 in. (762 mm)	304 SS	3" (DN80) Flange	Buna-N
KCM-MC-S316-0007	12 x 30 in. (762 mm)	316 SS	3" (DN80) Flange	EPDM
KCM-MC-S316-0008	12 x 40 in. (1,016 mm)	316 SS	3" (DN80) Flange	EPDM

Flanged connections

Nominal inch and DN sizes identify port size. Flange drilling, pressure class and facing remain part of the specific assembly specification.

© 2026 Kcmfilter

CAPACITY & MODEL SELECTION

22-Cartridge Housings

2 configurations. Nominal cartridge length, housing material, process connection and cover seal are listed for each part number.



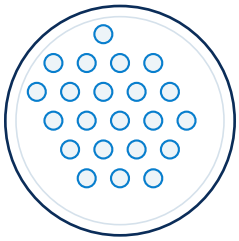

22 elements per vessel

Capacity schematic

Representative construction; model data below.

KCM Part Number	Cartridges / Length	Material	Process Connection	Seal
KCM-MC-S304-0060	22 x 30 in. (762 mm)	304 SS	4" (DN100) Flange	EPDM
KCM-MC-S316-0068	22 x 30 in. (762 mm)	316 SS	4" (DN100) Flange	Buna-N

Flanged connections

Nominal inch and DN sizes identify port size. Flange drilling, pressure class and facing remain part of the specific assembly specification.

© 2026 Kcmfilter

INSTALLATION REFERENCE

4 & 5 Cartridge Dimensions

Reference geometry for the listed Global Filter cross-reference configurations. A is the closed-vessel height from the mounting plane.

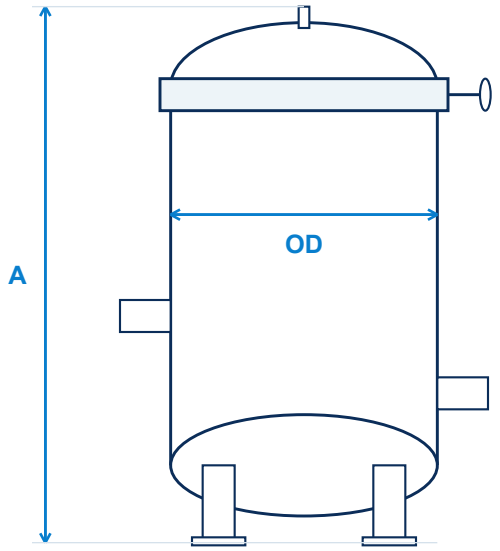

Dimension-key illustration

Body OD

8.00" (203 mm)

Mounting bolt circle

11.06" (281 mm)

Mounting holes

3 x 0.50" (12.7 mm)

Port-to-port span

10.25" (260 mm)

KCM Part Number	Cartridges / Length	A - Reference Height
KCM-MC-S304-0061	4 x 20 in.	33.75" (857 mm)
KCM-MC-S304-0062	4 x 30 in.	43.75" (1,111 mm)
KCM-MC-S316-0069	5 x 10 in.	23.75" (603 mm)
KCM-MC-S304-0063	5 x 20 in.	33.75" (857 mm)
KCM-MC-S316-0070	5 x 20 in.	33.75" (857 mm)
KCM-MC-S304-0064	5 x 30 in.	43.75" (1,111 mm)

CS094 Rev B: 2" MNPT reference family. Dimensions do not define a manufacturing drawing or a fit guarantee.

© 2026 Kcmfilter

INSTALLATION REFERENCE

7-Cartridge Dimensions

Reference geometry for the listed Global Filter cross-reference configurations. A is the closed-vessel height from the mounting plane.

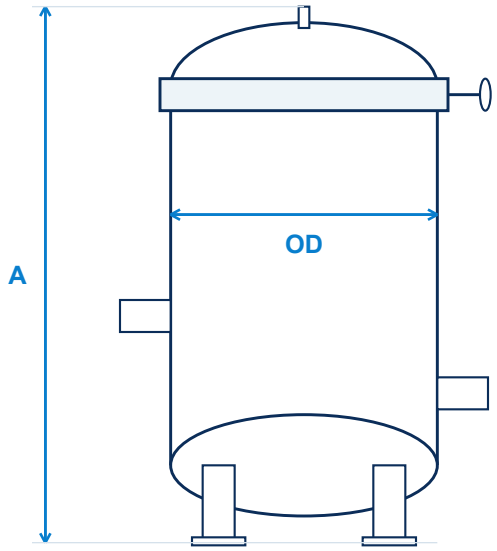

Dimension-key illustration

Body OD

10.00" (254 mm)

Mounting bolt circle

13.10" (333 mm)

Mounting holes

3 x 0.50" (12.7 mm)

Port-to-port span

12.40" (315 mm)

KCM Part Number	Cartridges / Length	A - Reference Height
KCM-MC-S304-0065	7 x 30 in.	45.50" (1,156 mm)

Installation envelope

Provide cartridge withdrawal space above the open vessel and access to the clamp fastener, drain and instrument connections. Pipework requires independent support.

CS072 Rev B: 2" MNPT reference family. Dimensions do not define a manufacturing drawing or a fit guarantee.

© 2026 Kcmfilter

INSTALLATION REFERENCE

12-Cartridge Dimensions

Reference geometry for the listed Global Filter cross-reference configurations. A is the closed-vessel height from the mounting plane.

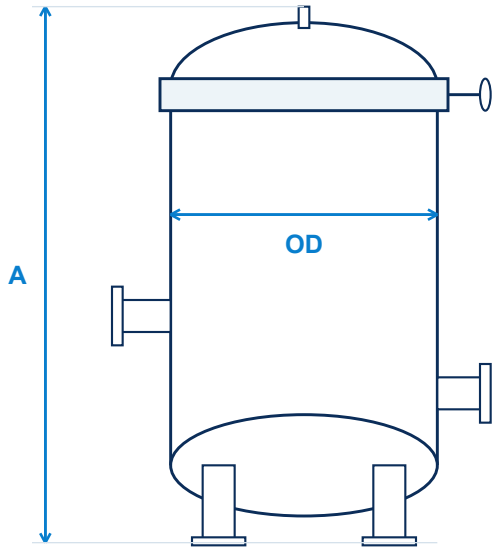

Dimension-key illustration

Body OD

12.00" (305 mm)

Mounting bolt circle

16.80" (427 mm)

Mounting holes

3 x 0.56" (14.2 mm)

Port-to-port span

16.70" (424 mm)

Port span tolerance: ±0.25 in. (6.4 mm)

KCM Part Number	Cartridges / Length	A - Reference Height
KCM-MC-S304-0059	12 x 30 in.	51.00" (1,295 mm)

Installation envelope

Provide cartridge withdrawal space above the open vessel and access to the clamp fastener, drain and instrument connections. Pipework requires independent support.

A height tolerance: ±0.25 in. (6.4 mm), per CS105 Rev B.

CS105 Rev B: 3" (DN80) RF Flange reference family. Dimensions do not define a manufacturing drawing or a fit guarantee.

© 2026 Kcmfilter

INSTALLATION REFERENCE

22-Cartridge Dimensions

Reference geometry for the listed Global Filter cross-reference configurations. A is the closed-vessel height from the mounting plane.

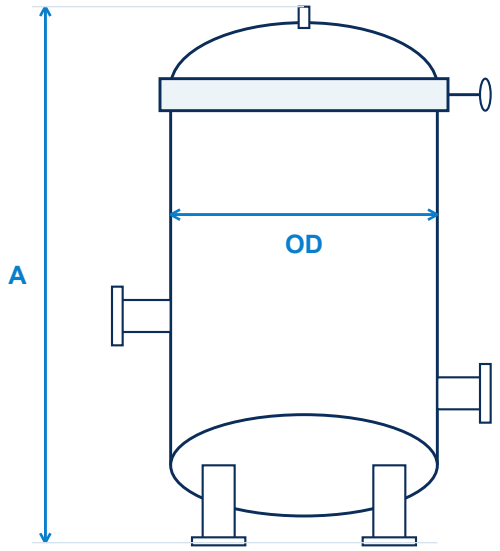

Dimension-key illustration

Body OD

16.26" (413 mm)

Mounting bolt circle

21.30" (541 mm)

Mounting holes

3 x 0.56" (14.2 mm)

Port-to-port span

21.14" (537 mm)

Port span tolerance: ±0.25 in. (6.4 mm)

KCM Part Number	Cartridges / Length	A - Reference Height
KCM-MC-S304-0060	22 x 30 in.	51.57" (1,310 mm)
KCM-MC-S316-0068	22 x 30 in.	51.57" (1,310 mm)

Installation envelope

Provide cartridge withdrawal space above the open vessel and access to the clamp fastener, drain and instrument connections. Pipework requires independent support.

CS106 Rev D: 4" (DN100) RF Flange reference family. Dimensions do not define a manufacturing drawing or a fit guarantee.

© 2026 Kcmfilter

OPERATING REFERENCES

Pressure & Flow Selection

Vessel working pressure, cartridge differential pressure and seal temperature limits are separate selection inputs.

Configuration Basis	Pressure and Temperature
GTCHB US reference configurations	150 psi (10.3 bar) at 250°F (121°C), per reference ordering code 15.
Other KCM configurations	The selected pressure boundary, ports and seal define the order rating.

Flow sizing

Choose the number and length of cartridges from the required flow, media pressure drop, viscosity and solids loading. Total element area is not a housing flow guarantee.

Reference Selection	Source Flow Guideline
KCM-MC-S304-0029 / 4 x 10 in.	28 US gpm (6.4 m³/h)
KCM-MC-S304-0031 / 7 x 20 in.	98 US gpm (22.3 m³/h)

The two flow values are manufacturer-reference selection guidelines for the corresponding source configurations. Metric values are calculated from US gpm; the selected cartridge and operating liquid determine actual performance.

Pressure loss: combine housing-only loss with cartridge loss at the operating flow and viscosity. Flange pressure class does not establish vessel working pressure.

© 2026 Kcmfilter

SERVICE & SPARES

Service Components

Use the KCM part number, serial number and installed cartridge-end arrangement to identify replacement parts.





Service Item	Identification Required
Cover seal	Compound, inside diameter, cross-section and groove geometry
Band and closure hardware	Band profile, rim diameter, fastener, pivot and latch design
Retention components	Plate, posts, seat cups, springs and caps
Filter elements	Count, actual length, outside diameter, end style, media and micron rating

Replace damaged closure components as the specified assembly. Keep seal grooves, cartridge seating surfaces and pressure/vent connections clean and accessible.

© 2026 Kcmfilter

COMPLETE MODEL INDEX

KCM Part Number Index

All 19 configurations, grouped by cartridge count. Each part number opens its individual KCM product page.

KCM Part Number	Cartridges / Length	Material	Process Connection	Seal
KCM-MC-S304-0029	4 x 10 in.	304 SS	2" FNPT	EPDM
KCM-MC-S304-0003	4 x 20 in.	304 SS	2" MNPT	FKM
KCM-MC-S304-0061	4 x 20 in.	304 SS	2" MNPT	Buna-N
KCM-MC-S304-0062	4 x 30 in.	304 SS	2" MNPT	Buna-N
KCM-MC-S316-0009	4 x 30 in.	316 SS	2" MNPT	EPDM
KCM-MC-S316-0069	5 x 10 in.	316 SS	2" MNPT	Buna-N
KCM-MC-S304-0004	5 x 20 in.	304 SS	2" MNPT	FKM
KCM-MC-S304-0063	5 x 20 in.	304 SS	2" MNPT	Buna-N
KCM-MC-S316-0010	5 x 20 in.	316 SS	2" MNPT	EPDM
KCM-MC-S316-0070	5 x 20 in.	316 SS	2" MNPT	Buna-N
KCM-MC-S304-0064	5 x 30 in.	304 SS	2" MNPT	Buna-N
KCM-MC-S304-0005	7 x 20 in.	304 SS	2" FNPT	EPDM
KCM-MC-S304-0031	7 x 20 in.	304 SS	2" FNPT	EPDM
KCM-MC-S304-0065	7 x 30 in.	304 SS	2" MNPT	Buna-N
KCM-MC-S304-0059	12 x 30 in.	304 SS	3" (DN80) Flange	Buna-N
KCM-MC-S316-0007	12 x 30 in.	316 SS	3" (DN80) Flange	EPDM
KCM-MC-S316-0008	12 x 40 in.	316 SS	3" (DN80) Flange	EPDM
KCM-MC-S304-0060	22 x 30 in.	304 SS	4" (DN100) Flange	EPDM
KCM-MC-S316-0068	22 x 30 in.	316 SS	4" (DN100) Flange	Buna-N

7 x 20 in. configurations: KCM-MC-S304-0005 uses the standard glass-bead reference finish; KCM-MC-S304-0031 specifies an electropolished finish, 3/4" MNPT drains and 1/4" FNPT gauge ports.

© 2026 Kcmfilter

OEM CROSS-REFERENCE GUIDE

Global Filter References

10 registered reference configurations. Each KCM part number links to its corresponding product page.

KCM Part Number	Reference Brand	Original Reference	Cartridges / Length
KCM-MC-S304-0061	Global Filter	GTCHB422M2415PC	4 x 20 in.
KCM-MC-S304-0062	Global Filter	GTCHB432M2415PC	4 x 30 in.
KCM-MC-S316-0069	Global Filter	GTCHB512M2615PC	5 x 10 in.
KCM-MC-S304-0063	Global Filter	GTCHB522M2415PC	5 x 20 in.
KCM-MC-S316-0070	Global Filter	GTCHB522M2615PC	5 x 20 in.
KCM-MC-S304-0064	Global Filter	GTCHB532M2415PC	5 x 30 in.
KCM-MC-S304-0065	Global Filter	GTCHB732M2415PC	7 x 30 in.
KCM-MC-S304-0059	Global Filter	GTCHB1233F2415PC	12 x 30 in.
KCM-MC-S304-0060	Global Filter	GTCHB2234F2415PC	22 x 30 in.
KCM-MC-S316-0068	Global Filter	GTCHB2234F2615PC	22 x 30 in.

The cross-reference identifies the recorded source configuration. Replacement selection also includes cartridge end fittings, process connections, seal compound, nozzle position and installation envelope.

© 2026 Kcmfilter

SELECTION & ORDERING

Ordering Guide

Specify the complete KCM part number and the actual operating duty. Cartridge media and micron rating are ordered separately.

Required Item	Order Information
Housing configuration	KCM part number, quantity, material and cover seal
Element specification	Count, length, outside diameter and end fitting
Process connections	Size, thread gender or flange standard/class/facing
Liquid duty	Liquid, concentration, flow, viscosity and solids
Pressure and temperature	Normal, peak and design conditions
Documents and installation	Code documents, nozzle positions and service space

What does the band clamp do?

It retains the cover at the vessel rim. The perimeter seal seals the joint; the clamp itself is not the fluid seal.

Are DOE and 222 elements interchangeable?

The listed families support these end styles through the correct seats and retention components. End fittings and hold-down hardware must match as an assembly.

© 2026 Kcmfilter

SALES & ENGINEERING

Request a Quotation

Send the KCM part number and operating conditions, or provide the existing vessel nameplate and assembly drawing.

Housing and quantity

KCM part number; material; seal compound; process connection and required quantity.

Filter elements

Cartridges per vessel; nominal and actual length; outside diameter; end fitting; media and micron rating.

Operating conditions

Liquid and concentration; normal/peak flow; viscosity; operating/design pressure and temperature; allowable differential pressure.

Installation and documents

Nozzle coordinates; mounting footprint; overhead access; required material, inspection and code documents.

Contact Kcmfilter

sales@kcmfilter.com **+1 (934) 234-9228**

Published specifications apply to the stated configurations; final supply is defined by the agreed quotation and approved drawings.

Kcmfilter is independent of Global Filter. All third-party trademarks belong to their respective owners.

© 2026 Kcmfilter