KCM-MC

Swing-Bolt Multi-Cartridge Filter Housings

Stainless steel housings for industrial liquid filtration. Cartridge end fittings, cover access, installation references and 85 selected configurations.



Construction

Cartridge seats and hold-downs.

Select a Model

3 to 51 cartridges per vessel.

Cross-Reference

Global Filter and Harmsco.

© 2026 Kcmfilter

CONTENTS

Selection Guide

Construction, element fit and servicing come first. Grouped selection tables link directly to the exact KCM part number.

Cartridge count and construction	**03**
Materials, seals and documents	**04**
Internal construction and end fittings	**05-07**
Hold-down systems and cover access	**08-09**
Dimensions and installation	**10-11**
Pressure, flow and service parts	**12-13**
Capacity photographs and model selection	**14-26**
OEM Cross-Reference Guide	**27-29**
Quotation information	**30**

85 printed selections · 40 KCM configurations and 45 registered OEM-reference selections. The online collection contains 92 configurations.

Full model catalog: kcmfilter.com/series/kcm-mc-multi-cartridge-filter-housings

© 2026 Kcmfilter

PRODUCT RANGE

Select the Cartridge Count

One pressure vessel contains multiple standard-diameter cartridges. Nominal element length and cartridge end fittings are separate selection fields.

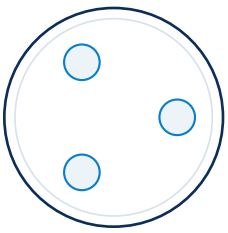

3 cartridges

8 selections

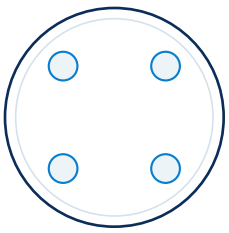

4 cartridges

7 selections

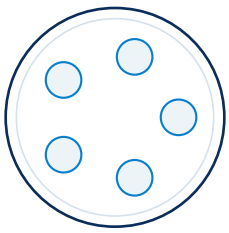

5 cartridges

15 selections

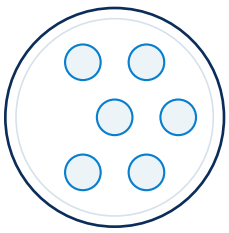

6 cartridges

1 selection

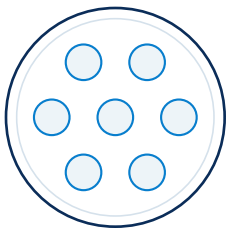

7 cartridges

22 selections

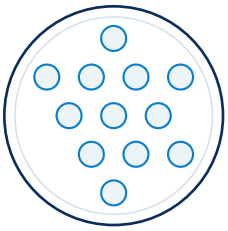

12 cartridges

15 selections

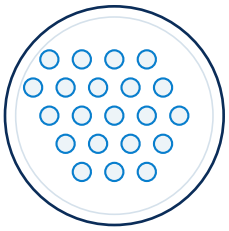

21 cartridges

10 selections

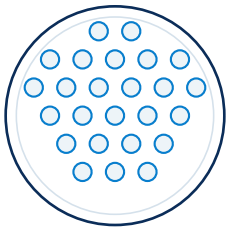

25 cartridges

2 selections

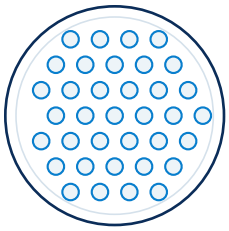

36 cartridges

3 selections

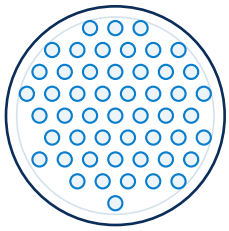

51 cartridges

2 selections

Element length

20, 30 or 40 in. (508, 762 or 1,016 mm) nominal length is listed against the exact model. The housing diameter does not determine element length.

Count schematics are illustrative; they do not specify a manufacturing hole pattern, pitch or sealing arrangement.

© 2026 Kcmfilter

MATERIALS & DOCUMENTATION

Materials, Seals & Finish

Material grade, cover seal and cartridge-seat configuration are specified independently for each assembly.

Selection Field	Available / Listed Configuration
Housing material	304 SS and 316 SS configurations; use the listed model grade.
Cover seal	NBR (Buna-N), EPDM and encapsulated FKM, as listed.
Cartridge seats	DOE, 222/Flat or 222/Fin with the corresponding seat and hold-down assembly.
Surface finish	Glass bead or electropolished configurations; GB and EP identify the reference finish.
Process connections	Threaded NPT / FNPT, flanged or TC clamp ports.
Support	Welded support legs with mounting feet.

ASME U-Stamp certification

All KCM-MC models are ASME U-Stamp certified. Contact Kcmfilter for quotations and technical support.

Table key: ASME U-Stamp (Ref.) identifies the referenced configuration. High-Pressure Option identifies a separately rated pressure version; the approved order rating applies. Custom Assembly identifies separately specified construction.

GB = glass bead finish. EP = electropolished finish. The cover seal, cartridge seats and end fittings are specified separately.

© 2026 Kcmfilter

CONSTRUCTION

Internal Construction

Transparent views show the shell, support plate, cover fasteners and lifting components. These are construction illustrations, not cartridge-count diagrams.

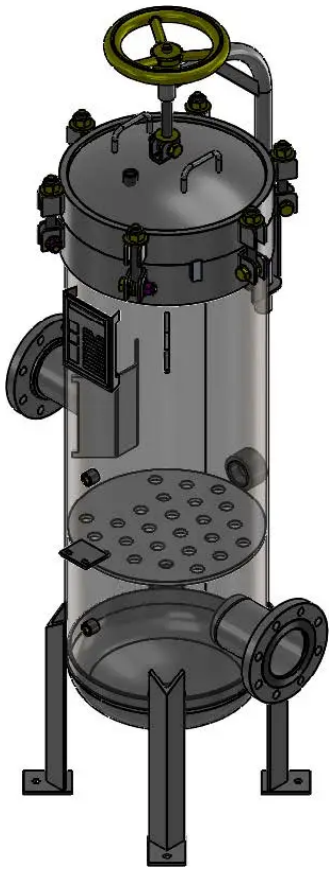

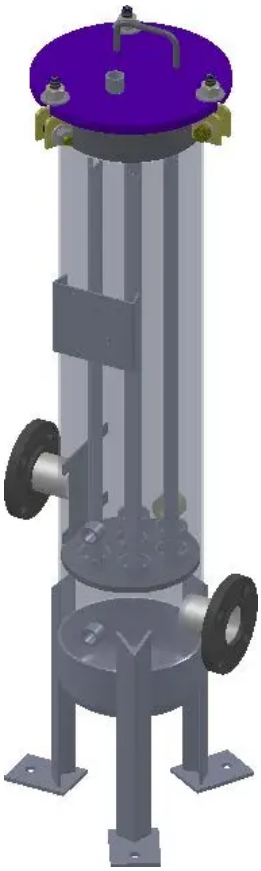

Davit and support plate

Handwheel spindle, lifting arm, side flanges and the perforated internal plate.

Flat-cover arrangement

Removable cover, vertical internal members, lower support and mounting feet.

© 2026 Kcmfilter

CARTRIDGE ASSEMBLY

Cutaway & Closed Housing

An open cutaway shows the cartridge elements and upper spring retainers beside the closed handwheel-davit housing.



Cartridge supports

Lower seats match the cartridge end fitting.

Upper hold-downs

Springs, plates or individual retainers locate the cartridges.

Cover seal

Perimeter seal between the cover and vessel.

© 2026 Kcmfilter

CARTRIDGE FIT

Cartridge End Fittings

DOE and 222 single-open-end cartridges use different lower seats and upper retainers. The matching assembly is part of the housing configuration.

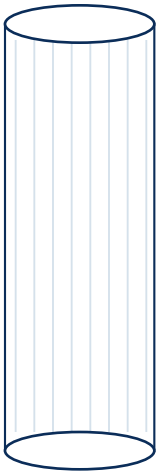

DOE

Double-open-end cartridge with end gaskets.

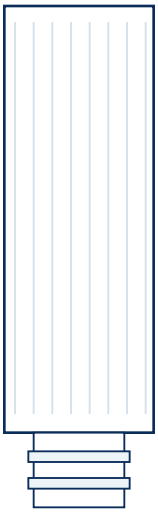

222 / Flat

Two O-rings at one end; flat upper end.

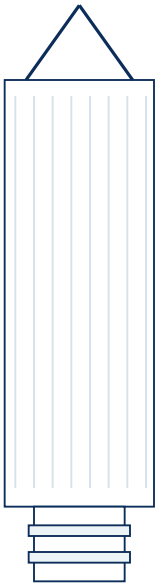

222 / Fin

Two O-rings at one end; fin upper end.

Seat and retainer set

Match cartridge outside diameter, actual length, end-cap geometry and the corresponding lower seat. A 222 cartridge and a DOE cartridge are not interchangeable merely because their nominal length is the same.

Diagrams are not to scale. Element media and micron rating are specified separately from the housing.

© 2026 Kcmfilter

INTERNAL DETAILS

5-Cartridge Hold-Downs

Five-position spring plate and five individual retainers. These are two different retaining arrangements for the illustrated cartridge sets.





Spring hold-down plate

A common plate and central fastener locate the spring-loaded retainers. The cartridge seats and springs form a matched assembly.

Individual retainers

Each visible cartridge top has an individual threaded retainer. Use the matching cap, washer and end fitting.

Cover-seal colour is not a material identification. Illustrations show construction details, not universal spare-part interchangeability.

© 2026 Kcmfilter

COVER ACCESS

Swing-Bolt Cover & Davit

The handwheel controls vertical cover travel; the davit supports the cover while it moves away from the vessel opening.



Swing-bolt closure

Eye nuts and pivoting bolts release the cover flange.

Handwheel lift

The spindle raises the cover clear of its perimeter seal.

Davit movement

Cover movement needs lateral space as well as overhead clearance.

Before opening: isolate, depressurize and drain the vessel. Use the supplied operating procedure and the rated lifting mechanism.

© 2026 Kcmfilter

INSTALLATION DATA

Dimensional References

Reference dimensions apply to the stated connection family. A is closed overall height; B is the body/flange reference height shown on the assembly drawing.

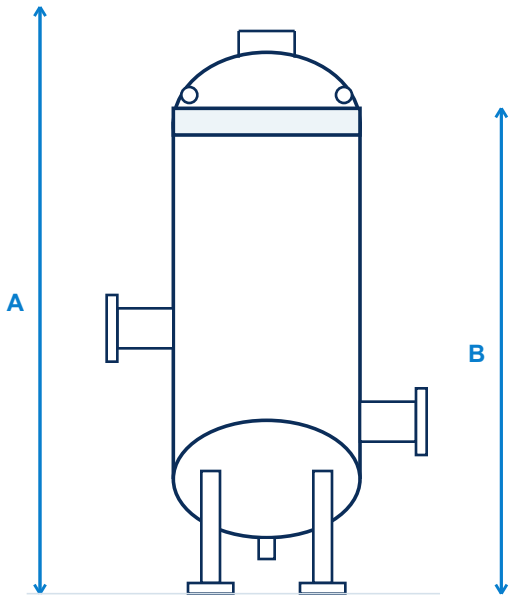

5 cartridges / 1-1/2" TC

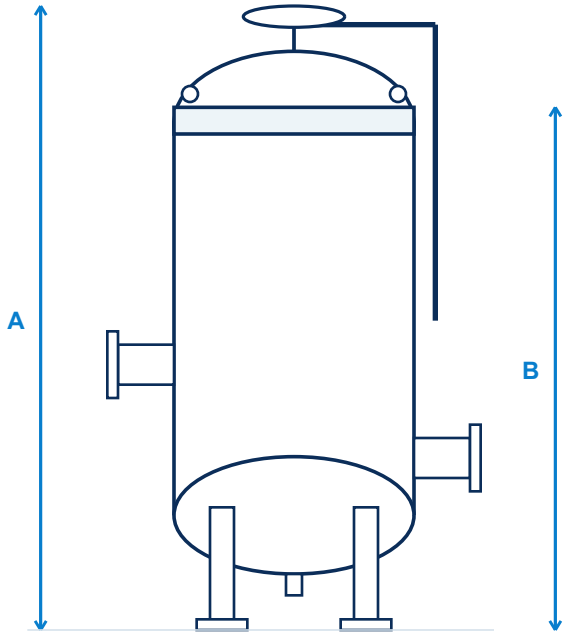

12 cartridges / 3" RF flange

Reference Family	Element Length	A	B
5-cartridge / TC	20" (508 mm)	38.0" (965 mm)	34.6" (879 mm)
5-cartridge / TC	30" (762 mm)	48.0" (1,219 mm)	44.6" (1,133 mm)
5-cartridge / TC	40" (1,016 mm)	58.0" (1,473 mm)	54.6" (1,387 mm)
12-cartridge / RF	30" (762 mm)	56.9" (1,445 mm)	50.7" (1,288 mm)
12-cartridge / RF	40" (1,016 mm)	66.9" (1,699 mm)	60.7" (1,542 mm)

CS115 Rev B and CS099 Rev A reference geometry. Connection styles and revisions remain part of the dimensional identification.

© 2026 Kcmfilter

INSTALLATION

Ports & Service Clearance

Closed vessel height, open-cover movement and cartridge withdrawal occupy different parts of the installation envelope.

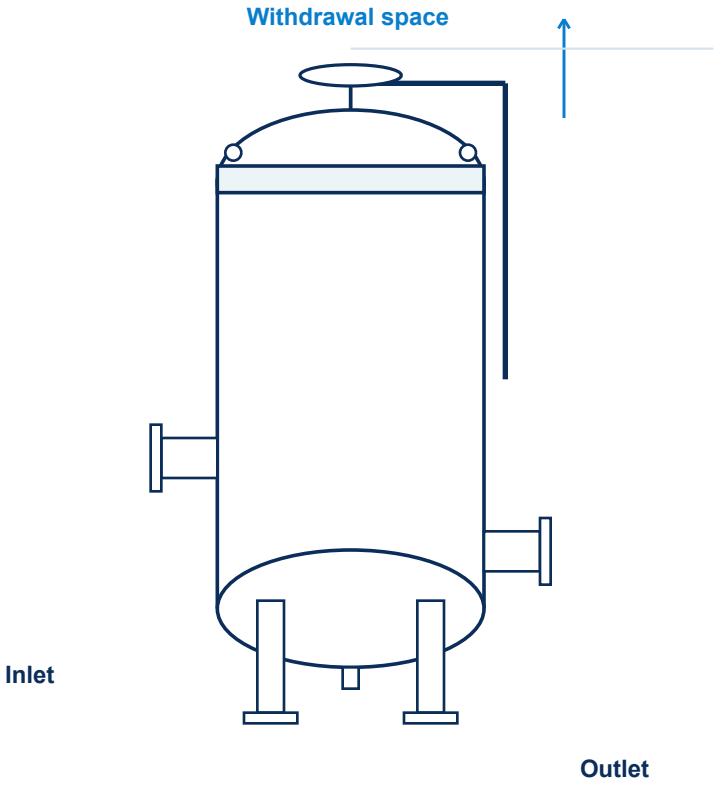

Overhead access

Allow for the actual cartridge length, lifting fixture and the open-cover position shown on the selected assembly drawing.

Drain and instrument access

Keep drains, vent and pressure-gauge ports accessible after pipework and support frames are installed.

Mounting and pipework

Use the mounting-hole pattern and nozzle coordinates for the selected connection family. Support connected pipework.

Reference port sizes: the 5-cartridge TC drawing lists a 1/4" FNPT vent and gauge ports with a 1" FNPT clean drain. The 12-cartridge RF drawing lists a 1/2" FNPT vent, 1/4" FNPT gauges and 1-1/2" FNPT drains.

These port details are family-specific and do not apply automatically to the other listed vessel sizes.

© 2026 Kcmfilter

ENGINEERING REFERENCES

Pressure & Flow Selection

Vessel pressure, cartridge differential pressure and the pressure-temperature limit of the seal are separate design inputs.

Reference Configuration	Pressure / Temperature Basis
GTCH reference family	150 psi (10.3 bar) at 250°F (121°C), per reference ordering data.
HMC reference family	Up to 150 psi (10.3 bar); up to 250°F (121°C), housing only.
Other KCM configurations	The delivered vessel, connection and seal determine the stated order rating.

HMC housing flow guidelines

Original US gpm values are shown with calculated metric conversions. These are selection guidelines; cartridge type, viscosity and solids loading determine actual duty.

KCM Part Number	Reference	Flow Guideline
KCM-MC-S304-0087	HMC-5	150 US gpm (34.1 m³/h)
KCM-MC-S304-0085	HMC-12-FL	300 US gpm (68.1 m³/h)
KCM-MC-S304-0086	HMC-21-FL	600 US gpm (136.3 m³/h)

Pressure-drop calculation: combine the housing-only loss with the selected cartridge loss at the operating liquid viscosity and flow. Use the loss data for the selected housing and cartridge combination.

Flange class is a connection designation; it is not a vessel working-pressure rating.

© 2026 Kcmfilter

SERVICE COMPONENTS

Service Parts & Maintenance

Identify replacement parts by housing part number, serial number and the actual cartridge-seat/hold-down arrangement.



Cover seal

Compound, groove geometry and cross-section identify the correct seal.

Hold-down components

Retain the specified plate, springs, studs, nuts and washers as a matched system.

Cartridge seating

Clean seating surfaces and inspect the cartridge end seals at change-out.

Service Item	Order Information
Cover seal	Housing serial number, seal compound and dimensions.
Cartridge / hold-down set	Nominal length, end style, outside diameter and retainer geometry.

© 2026 Kcmfilter

CARTRIDGE CAPACITY

3 & 4 Cartridges

Representative constructions and selected configurations. The following tables list the complete part numbers and available element lengths.





3-cartridge housing

KCM-MC-S316-0035

Cartridges: 3 x 30 in. (762 mm)
Material: 316 SS
Connection: 1-1/2" (DN40) Flange
Seal: Buna-N

4-cartridge housing

KCM-MC-S316-0015

Cartridges: 4 x 20 in. (508 mm)
Material: 316 SS
Connection: 1-1/2" (DN40) Flange
Seal: EPDM



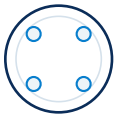

Capacity diagrams show element count only; they are not manufacturing hole patterns.

© 2026 Kcmfilter

MODEL SELECTION

3- and 4-Cartridge Models

15 configurations. Each complete KCM part number links to its product page.

KCM Part Number	Cartridges / Length	Material	Process Connection	Seal	Configuration
KCM-MC-S316-0051	3 x 20 in. (508 mm)	316 SS	1-1/2" (DN40) Flange	Buna-N	Bottom outlet / EP
KCM-MC-S316-0052	3 x 20 in. (508 mm)	316 SS	1-1/2" (DN40) Flange	Buna-N	Opposed outlet / EP
KCM-MC-S316-0053	3 x 20 in. (508 mm)	316 SS	2" (DN50) Flange	Buna-N	Opposed outlet / GB
KCM-MC-S316-0035	3 x 30 in. (762 mm)	316 SS	1-1/2" (DN40) Flange	Buna-N	Custom Assembly
KCM-MC-S316-0054	3 x 30 in. (762 mm)	316 SS	1-1/2" (DN40) Flange	Buna-N	Opposed outlet / EP
KCM-MC-S316-0055	3 x 30 in. (762 mm)	316 SS	2" (DN50) Flange	Buna-N	Opposed outlet / GB
KCM-MC-S316-0056	3 x 40 in. (1016 mm)	316 SS	1-1/2" (DN40) Flange	Buna-N	Opposed outlet / EP
KCM-MC-S316-0057	3 x 40 in. (1016 mm)	316 SS	1-1/2" (DN40) Flange	Buna-N	Opposed outlet / EP
KCM-MC-S316-0015	4 x 20 in. (508 mm)	316 SS	1-1/2" (DN40) Flange	EPDM	High-Pressure Option
KCM-MC-S316-0018	4 x 20 in. (508 mm)	316 SS	1-1/2" (DN40) Flange	EPDM	Standard configuration
KCM-MC-S304-0016	4 x 30 in. (762 mm)	304 SS	2" FNPT	EPDM	Standard configuration
KCM-MC-S316-0016	4 x 30 in. (762 mm)	316 SS	2" FNPT	EPDM	Standard configuration
KCM-MC-S304-0017	4 x 40 in. (1016 mm)	304 SS	2" (DN50) Flange	EPDM	Standard configuration
KCM-MC-S304-0018	4 x 40 in. (1016 mm)	304 SS	2" FNPT	EPDM	Standard configuration
KCM-MC-S316-0017	4 x 40 in. (1016 mm)	316 SS	2" (DN50) Flange	EPDM	Standard configuration

Length is nominal cartridge length. NPT and FNPT retain the recorded thread designation. TC denotes a clamp ferrule.

© 2026 Kcmfilter

CARTRIDGE CAPACITY

5 & 6 Cartridges

Representative constructions and selected configurations. The following tables list the complete part numbers and available element lengths.





5-cartridge interior

Five cartridges; individual wing-nut retainers.

KCM-MC-S304-0030

Cartridges: 5 x 20 in. (508 mm)
Material: 304 SS
Connection: 2" FNPT
Seal: EPDM

6-cartridge interior

Six cartridge positions beneath the open cover.

KCM-MC-S304-0033

Cartridges: 6 x 30 in. (762 mm)
Material: 304 SS
Connection: 2" NPT
Seal: Buna-N

© 2026 Kcmfilter

MODEL SELECTION

5- and 6-Cartridge Models

16 configurations. Each complete KCM part number links to its product page.

KCM Part Number	Cartridges / Length	Material	Process Connection	Seal	Configuration
KCM-MC-S304-0030	5 x 20 in. (508 mm)	304 SS	2" FNPT	EPDM	Standard configuration
KCM-MC-S316-0059	5 x 20 in. (508 mm)	316 SS	1-1/2" (DN40) Flange	Buna-N	Opposed outlet / EP
KCM-MC-S316-0060	5 x 20 in. (508 mm)	316 SS	1-1/2" TC	Buna-N	Opposed outlet / EP
KCM-MC-S304-0032	5 x 30 in. (762 mm)	304 SS	2" (DN50) Flange	EPDM	Custom Assembly
KCM-MC-S304-0048	5 x 30 in. (762 mm)	304 SS	1-1/2" NPT	Buna-N	Opposed outlet / GB
KCM-MC-S304-0050	5 x 30 in. (762 mm)	304 SS	2" (DN50) Flange	Buna-N	Opposed outlet / EP
KCM-MC-S304-0051	5 x 30 in. (762 mm)	304 SS	2" (DN50) Flange	Buna-N	Opposed outlet / GB
KCM-MC-S304-0052	5 x 30 in. (762 mm)	304 SS	2" NPT	Buna-N	Opposed outlet / GB
KCM-MC-S304-0053	5 x 30 in. (762 mm)	304 SS	2" NPT	Buna-N	Opposed outlet / GB
KCM-MC-S316-0019	5 x 30 in. (762 mm)	316 SS	2" (DN50) Flange	EPDM	Standard configuration
KCM-MC-S316-0061	5 x 30 in. (762 mm)	316 SS	2" (DN50) Flange	Buna-N	Opposed outlet / EP
KCM-MC-S304-0019	5 x 40 in. (1016 mm)	304 SS	2" NPT	EPDM	Standard configuration
KCM-MC-S304-0087	5 x 40 in. (1016 mm)	304 SS	2" NPT	Buna-N	Harmsco reference
KCM-MC-S316-0062	5 x 40 in. (1016 mm)	316 SS	1-1/2" (DN40) Flange	Buna-N	Opposed outlet / EP
KCM-MC-S316-0063	5 x 40 in. (1016 mm)	316 SS	1-1/2" (DN40) Flange	Buna-N	Opposed outlet / EP
KCM-MC-S304-0033	6 x 30 in. (762 mm)	304 SS	2" NPT	Buna-N	Custom Assembly

© 2026 Kcmfilter

CARTRIDGE CAPACITY

7 Cartridges

Representative constructions and selected configurations. The following tables list the complete part numbers and available element lengths.



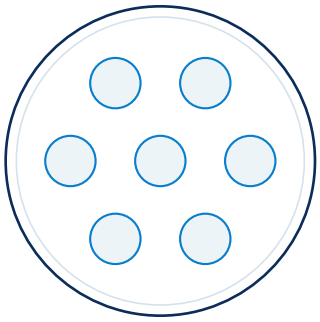

7-cartridge capacity

KCM-MC-S304-0022

Cartridges: 7 x 30 in. (762 mm)
Material: 304 SS
Connection: 2" (DN50) Flange
Seal: EPDM

Exterior: swing-bolt cover, handwheel davit, side flanges and mounting feet.

The count diagram identifies seven cartridge positions. The closed exterior illustrates the flanged construction; it does not show the internal element arrangement.

© 2026 Kcmfilter

MODEL SELECTION

7-Cartridge Models / 1

16 configurations. Each complete KCM part number links to its product page.

KCM Part Number	Cartridges / Length	Material	Process Connection	Seal	Configuration
KCM-MC-S304-0055	7 x 20 in. (508 mm)	304 SS	2" (DN50) Flange	Buna-N	Opposed outlet / EP
KCM-MC-S316-0064	7 x 20 in. (508 mm)	316 SS	2" (DN50) Flange	Buna-N	Opposed outlet / GB
KCM-MC-S304-0022	7 x 30 in. (762 mm)	304 SS	2" (DN50) Flange	EPDM	Standard configuration
KCM-MC-S304-0023	7 x 30 in. (762 mm)	304 SS	2" FNPT	EPDM	Standard configuration
KCM-MC-S304-0024	7 x 30 in. (762 mm)	304 SS	2" FNPT	EPDM	Standard configuration
KCM-MC-S304-0025	7 x 30 in. (762 mm)	304 SS	3" (DN80) Flange	EPDM	Standard configuration
KCM-MC-S304-0056	7 x 30 in. (762 mm)	304 SS	2" NPT	Buna-N	Opposed outlet / GB
KCM-MC-S304-0057	7 x 30 in. (762 mm)	304 SS	3" NPT	Buna-N	Opposed outlet / GB
KCM-MC-S316-0002	7 x 30 in. (762 mm)	316 SS	2" (DN50) Flange	EPDM	Standard configuration
KCM-MC-S316-0003	7 x 30 in. (762 mm)	316 SS	3" (DN80) Flange	EPDM	Standard configuration
KCM-MC-S316-0020	7 x 30 in. (762 mm)	316 SS	2" (DN50) Flange	EPDM	Standard configuration
KCM-MC-S316-0022	7 x 30 in. (762 mm)	316 SS	2" (DN50) Flange	Encapsulated FKM	Seal variant
KCM-MC-S316-0023	7 x 30 in. (762 mm)	316 SS	3" (DN80) Flange	EPDM	Standard configuration
KCM-MC-S316-0024	7 x 30 in. (762 mm)	316 SS	3" (DN80) Flange	EPDM	ASME U-Stamp (Ref.)
KCM-MC-S316-0065	7 x 30 in. (762 mm)	316 SS	2" (DN50) Flange	Buna-N	Opposed outlet / EP
KCM-MC-S316-0066	7 x 30 in. (762 mm)	316 SS	2" (DN50) Flange	Buna-N	Opposed outlet / GB

© 2026 Kcmfilter

MODEL SELECTION

7-Cartridge Models / 2

6 configurations. Each complete KCM part number links to its product page.

KCM Part Number	Cartridges / Length	Material	Process Connection	Seal	Configuration
KCM-MC-S304-0020	7 x 40 in. (1016 mm)	304 SS	2" FNPT	EPDM	FNPT configuration
KCM-MC-S304-0021	7 x 40 in. (1016 mm)	304 SS	2" NPT	EPDM	NPT configuration
KCM-MC-S304-0058	7 x 40 in. (1016 mm)	304 SS	2" NPT	Buna-N	Opposed outlet / GB
KCM-MC-S316-0025	7 x 40 in. (1016 mm)	316 SS	2" (DN50) Flange	EPDM	ASME U-Stamp (Ref.)
KCM-MC-S316-0067	7 x 40 in. (1016 mm)	316 SS	2" NPT	Buna-N	Opposed outlet / GB
KCM-SC-S316-0068	7 x 40 in. (1016 mm)	316 SS	2" (DN50) Flange	Buna-N	Opposed outlet / GB

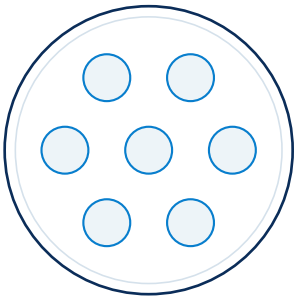

7 cartridges

Count schematics show capacity only; cartridge pitch, seats and nozzle positions follow the selected assembly.

KCM-SC-S316-0068 is the registered part number for the listed 7 x 40 in. configuration; its existing product identity is retained.

© 2026 Kcmfilter

CARTRIDGE CAPACITY

12 Cartridges

Representative constructions and selected configurations. The following tables list the complete part numbers and available element lengths.



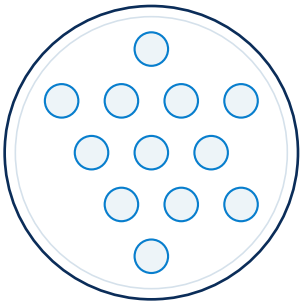

12 cartridges

KCM-MC-S304-0006

Cartridges: 12 x 30 in. (762 mm)
Material: 304 SS
Connection: 3" (DN80) Flange
Seal: EPDM

Open-cartridge view

Twelve cartridge tops, two retaining rods and the perimeter cover seal are visible. Cartridge end fittings and upper retainers follow the selected assembly.

© 2026 Kcmfilter

MODEL SELECTION

12-Cartridge Models

15 configurations. Each complete KCM part number links to its product page.

KCM Part Number	Cartridges / Length	Material	Process Connection	Seal	Configuration
KCM-MC-S304-0006	12 x 30 in. (762 mm)	304 SS	3" (DN80) Flange	EPDM	Standard configuration
KCM-MC-S304-0041	12 x 30 in. (762 mm)	304 SS	3" (DN80) Flange	Buna-N	Opposed outlet / EP
KCM-MC-S316-0012	12 x 30 in. (762 mm)	316 SS	3" (DN80) Flange	EPDM	Standard configuration
KCM-MC-S316-0013	12 x 30 in. (762 mm)	316 SS	3" (DN80) Flange	Encapsulated FKM	Seal variant
KCM-MC-S316-0041	12 x 30 in. (762 mm)	316 SS	3" (DN80) Flange	EPDM	Opposed outlet / EP
KCM-MC-S316-0042	12 x 30 in. (762 mm)	316 SS	3" (DN80) Flange	EPDM	Opposed outlet / EP
KCM-MC-S304-0007	12 x 40 in. (1016 mm)	304 SS	3" (DN80) Flange	EPDM	Standard configuration
KCM-MC-S304-0008	12 x 40 in. (1016 mm)	304 SS	4" (DN100) Flange	EPDM	Standard configuration
KCM-MC-S304-0009	12 x 40 in. (1016 mm)	304 SS	4" (DN100) Flange	EPDM	ASME U-Stamp (Ref.)
KCM-MC-S304-0042	12 x 40 in. (1016 mm)	304 SS	3" (DN80) Flange	Buna-N	Opposed outlet / GB
KCM-MC-S304-0085	12 x 40 in. (1016 mm)	304 SS	3" (DN80) Flange	Buna-N	Harmsco reference
KCM-MC-S316-0043	12 x 40 in. (1016 mm)	316 SS	3" (DN80) Flange	EPDM	Opposed outlet / GB
KCM-MC-S316-0044	12 x 40 in. (1016 mm)	316 SS	3" (DN80) Flange	EPDM	Opposed outlet / EP
KCM-MC-S316-0045	12 x 40 in. (1016 mm)	316 SS	3" TC	EPDM	Opposed outlet / GB
KCM-MC-S316-0046	12 x 40 in. (1016 mm)	316 SS	3" (DN80) Flange	EPDM	Opposed outlet / GB

© 2026 Kcmfilter

CARTRIDGE CAPACITY

21 & 25 Cartridges

Representative constructions and selected configurations. The following tables list the complete part numbers and available element lengths.



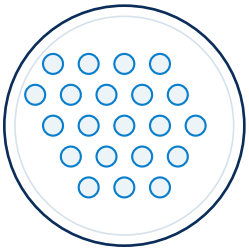

21 cartridges

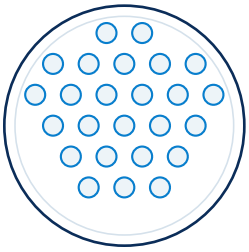

25 cartridges

KCM-MC-S304-0002

Cartridges: 25 x 30 in. (762 mm)
Material: 304 SS
Connection: 4" (DN100) Flange
Seal: Buna-N

KCM-MC-S304-0010

Cartridges: 21 x 30 in. (762 mm)
Material: 304 SS
Connection: 4" (DN100) Flange
Seal: EPDM

Photo: closed 25-cartridge housing with a handwheel davit and side flanges.

The 21- and 25-cartridge selections have separate capacity diagrams and model records.

© 2026 Kcmfilter

MODEL SELECTION

21- and 25-Cartridge Models

12 configurations. Each complete KCM part number links to its product page.

KCM Part Number	Cartridges / Length	Material	Process Connection	Seal	Configuration
KCM-MC-S304-0010	21 x 30 in. (762 mm)	304 SS	4" (DN100) Flange	EPDM	ASME U-Stamp (Ref.)
KCM-MC-S304-0043	21 x 30 in. (762 mm)	304 SS	4" (DN100) Flange	Buna-N	Opposed outlet / GB
KCM-MC-S316-0014	21 x 30 in. (762 mm)	316 SS	4" (DN100) Flange	EPDM	High-Pressure Option
KCM-MC-S316-0047	21 x 30 in. (762 mm)	316 SS	4" (DN100) Flange	EPDM	Opposed outlet / EP
KCM-MC-S316-0048	21 x 30 in. (762 mm)	316 SS	4" (DN100) Flange	Buna-N	Opposed outlet / GB
KCM-MC-S304-0011	21 x 40 in. (1016 mm)	304 SS	4" (DN100) Flange	EPDM	Standard configuration
KCM-MC-S304-0044	21 x 40 in. (1016 mm)	304 SS	4" (DN100) Flange	EPDM	Bottom outlet / GB
KCM-MC-S304-0086	21 x 40 in. (1016 mm)	304 SS	4" (DN100) Flange	Buna-N	Harmsco reference
KCM-MC-S316-0049	21 x 40 in. (1016 mm)	316 SS	4" (DN100) Flange	EPDM	Opposed outlet / EP
KCM-MC-S316-0050	21 x 40 in. (1016 mm)	316 SS	4" (DN100) Flange	EPDM	Opposed outlet / EP
KCM-MC-S304-0002	25 x 30 in. (762 mm)	304 SS	4" (DN100) Flange	Buna-N	Standard configuration
KCM-MC-S304-0034	25 x 30 in. (762 mm)	304 SS	4" (DN100) Flange	Buna-N	Custom Assembly

© 2026 Kcmfilter

CARTRIDGE CAPACITY

36 & 51 Cartridges

Representative constructions and selected configurations. The following tables list the complete part numbers and available element lengths.





36-cartridge housing

KCM-MC-S304-0013

Cartridges: 36 x 30 in. (762 mm)
Material: 304 SS
Connection: 4" (DN100) Flange
Seal: EPDM



51-cartridge housing

KCM-MC-S304-0046

Cartridges: 51 x 40 in. (1,016 mm)
Material: 304 SS
Connection: 6" (DN150) Flange
Seal: Buna-N



Capacity diagrams show element count only; they are not manufacturing hole patterns.

© 2026 Kcmfilter

MODEL SELECTION

36- and 51-Cartridge Models

5 configurations. Each complete KCM part number links to its product page.

KCM Part Number	Cartridges / Length	Material	Process Connection	Seal	Configuration
KCM-MC-S304-0013	36 x 30 in. (762 mm)	304 SS	4" (DN100) Flange	EPDM	ASME U-Stamp (Ref.)
KCM-MC-S304-0014	36 x 30 in. (762 mm)	304 SS	6" (DN150) Flange	EPDM	ASME U-Stamp (Ref.)
KCM-MC-S304-0015	36 x 40 in. (1016 mm)	304 SS	6" (DN150) Flange	EPDM	Standard configuration
KCM-MC-S304-0046	51 x 40 in. (1016 mm)	304 SS	6" (DN150) Flange	Buna-N	Opposed outlet / GB
KCM-MC-S316-0058	51 x 40 in. (1016 mm)	316 SS	6" (DN150) Flange	Buna-N	Opposed outlet / GB

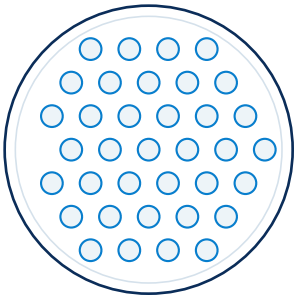

36 cartridges

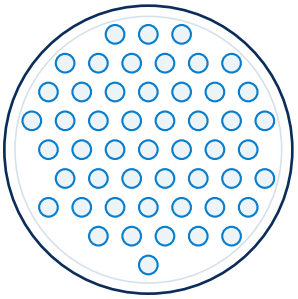

51 cartridges

Count schematics show capacity only; cartridge pitch, seats and nozzle positions follow the selected assembly.

© 2026 Kcmfilter

OEM CROSS-REFERENCE GUIDE

Cross-Reference Guide / 1

15 listed reference configurations. KCM part numbers link to their own product pages.

KCM Part Number	Reference Brand	Original Reference	Cartridges / Length
KCM-MC-S316-0051	Global Filter	GTCH321.5F1615EP	3 x 20 in.
KCM-MC-S316-0052	Global Filter	GTCH321.5F2615EP	3 x 20 in.
KCM-MC-S316-0053	Global Filter	GTCH322F2415GBU	3 x 20 in.
KCM-MC-S316-0054	Global Filter	GTCH331.5F2615EP	3 x 30 in.
KCM-MC-S316-0055	Global Filter	GTCH332F2615GBU	3 x 30 in.
KCM-MC-S316-0056	Global Filter	GTCH341.5F2615EP-E	3 x 40 in.
KCM-MC-S316-0057	Global Filter	GTCH341.5F2615EPU-E	3 x 40 in.
KCM-MC-S316-0059	Global Filter	GTCH521.5F2615EP	5 x 20 in.
KCM-MC-S316-0060	Global Filter	GTCH521.5T2615EP	5 x 20 in.
KCM-MC-S304-0048	Global Filter	GTCH531.5N2415GB	5 x 30 in.
KCM-MC-S304-0050	Global Filter	GTCH532F2415EP	5 x 30 in.
KCM-MC-S304-0051	Global Filter	GTCH532F2415GB	5 x 30 in.
KCM-MC-S304-0052	Global Filter	GTCH532N2415GB	5 x 30 in.
KCM-MC-S304-0053	Global Filter	GTCH532N2415GBU	5 x 30 in.
KCM-MC-S316-0061	Global Filter	GTCH532F2615EP	5 x 30 in.

Reference numbers identify the recorded configuration. Material grades are listed in the model tables; original reference codes are preserved. Cartridge end fittings, nozzle geometry and installation dimensions remain part of the replacement specification.

© 2026 Kcmfilter

OEM CROSS-REFERENCE GUIDE

Cross-Reference Guide / 2

15 listed reference configurations. KCM part numbers link to their own product pages.

KCM Part Number	Reference Brand	Original Reference	Cartridges / Length
KCM-MC-S304-0087	Harmsco	HMC-5	5 x 40 in.
KCM-MC-S316-0062	Global Filter	GTCH541.5F2615EP-E	5 x 40 in.
KCM-MC-S316-0063	Global Filter	GTCH541.5F2615EPU-E	5 x 40 in.
KCM-MC-S304-0055	Global Filter	GTCH722F2415EP	7 x 20 in.
KCM-MC-S316-0064	Global Filter	GTCH722F2415GBU	7 x 20 in.
KCM-MC-S304-0056	Global Filter	GTCH732N2415GB	7 x 30 in.
KCM-MC-S304-0057	Global Filter	GTCH733N2415GB	7 x 30 in.
KCM-MC-S316-0065	Global Filter	GTCH732F2615EP	7 x 30 in.
KCM-MC-S316-0066	Global Filter	GTCH732F2615GBU	7 x 30 in.
KCM-MC-S304-0058	Global Filter	GTCH742N2415GB	7 x 40 in.
KCM-MC-S316-0067	Global Filter	GTCH742N2615GBU	7 x 40 in.
KCM-SC-S316-0068	Global Filter	GTCH742F2615GB	7 x 40 in.
KCM-MC-S304-0041	Global Filter	GTCH1233F2415EP	12 x 30 in.
KCM-MC-S316-0041	Global Filter	GTCH1233F2615EP4	12 x 30 in.
KCM-MC-S316-0042	Global Filter	GTCH1233F2615EPU	12 x 30 in.

Reference numbers identify the recorded configuration. Material grades are listed in the model tables; original reference codes are preserved. Cartridge end fittings, nozzle geometry and installation dimensions remain part of the replacement specification.

© 2026 Kcmfilter

OEM CROSS-REFERENCE GUIDE

Cross-Reference Guide / 3

15 listed reference configurations. KCM part numbers link to their own product pages.

KCM Part Number	Reference Brand	Original Reference	Cartridges / Length
KCM-MC-S304-0042	Global Filter	GTCH1243F2415GB	12 x 40 in.
KCM-MC-S304-0085	Harmsco	HMC-12-FL	12 x 40 in.
KCM-MC-S316-0043	Global Filter	GTCH1243F2615	12 x 40 in.
KCM-MC-S316-0044	Global Filter	GTCH1243F2615EP	12 x 40 in.
KCM-MC-S316-0045	Global Filter	GTCH1243F2615GB-MOD-3T	12 x 40 in.
KCM-MC-S316-0046	Global Filter	GTCH1243F2615GBU	12 x 40 in.
KCM-MC-S304-0043	Global Filter	GTCH2134F2415GB	21 x 30 in.
KCM-MC-S316-0047	Global Filter	GTCH2134F2615EP	21 x 30 in.
KCM-MC-S316-0048	Global Filter	GTCH2134F2615GB	21 x 30 in.
KCM-MC-S304-0044	Global Filter	GTCH2144F1415GB	21 x 40 in.
KCM-MC-S304-0086	Harmsco	HMC-21-FL	21 x 40 in.
KCM-MC-S316-0049	Global Filter	GTCH2144F2615EP	21 x 40 in.
KCM-MC-S316-0050	Global Filter	GTCH2144F2615EPU	21 x 40 in.
KCM-MC-S304-0046	Global Filter	GTCH5146F2415GBU	51 x 40 in.
KCM-MC-S316-0058	Global Filter	GTCH5146F2615GBU	51 x 40 in.

Reference numbers identify the recorded configuration. Material grades are listed in the model tables; original reference codes are preserved. Cartridge end fittings, nozzle geometry and installation dimensions remain part of the replacement specification.

© 2026 Kcmfilter

SALES & ENGINEERING

Request a Quotation

Supply the complete KCM part number and the filtration duty so the housing, elements and supporting documents can be specified together.

Housing and quantity

KCM part number; housing material; cover seal; process connection standard and size.

Cartridge specification

Quantity per vessel; nominal and actual length; outside diameter; DOE, 222/Flat or 222/Fin; media and micron rating.

Operating conditions

Liquid and concentration; normal and peak flow; viscosity; operating/design temperature and pressure; allowable cartridge differential pressure.

Installation and documents

Existing nameplate and assembly drawing; nozzle coordinates; mounting and service envelope; required material and code documents.

Contact Kcmfilter

sales@kcmfilter.com **+1 (934) 234-9228**

Specifications apply to the stated configurations; final supply is defined by the agreed quotation and approved drawings.

Kcmfilter is independent of Global Filter and Harmsco. Third-party trademarks belong to their respective owners.

© 2026 Kcmfilter