KCM-MB
Multi-Bag Filter Housings

Single-vessel liquid filtration with size #2 bags. 3, 4, 6, 8, 12, 17 or 24 bags per vessel. 70 selections with material, connection, seal and replacement-reference details.



Representative KCM-MB housing configurations

Select a vessel

Compare bag counts and construction.

Find a model

41 KCM and 29 reference selections.

Request a quote

Specify the duty and installation.

© 2026 Kcmfilter

CONTENTS

Selection Guide

Start with vessel capacity and construction, then use the grouped tables to select an exact part number.

Range and model groups 03

Single vessel, size #2 bags and seven bag counts.

Materials and documentation 04

Connection standards and vessel documentation.

Construction and bag sealing 05

Flow path, baskets, cover seals and retention.

Installation and reference data 07

Clearances, bag plates and standard-body dimensions.

Pressure and flow references 10

Water-flow basis and model-specific operating limits.

KCM model selection 11

41 models grouped by bags per vessel.

Global Filter reference selection 18

GMBE / GMBV construction and 29 cross-references.

Ordering and spare parts 22

Complete part number and replacement-component details.

Request a quote 23

Duty conditions and Contact Kcmfilter.

© 2026 Kcmfilter

KCM-MB RANGE

Choose the Bag Count

All 70 selections are single-vessel configurations using size #2 bags. Low-profile housings and multi-vessel systems belong to separate series.

Bags per Vessel	Bag Size	Nominal Flanges	KCM	Reference	Total
3	#2	4" (DN100)	3	0	3
4	#2	3", 4", 6" (DN80, DN100, DN150)	10	6	16
6	#2	2", 3", 4", 6" (DN50, DN80, DN100, DN150)	14	10	24
8	#2	6", 8" (DN150, DN200)	5	6	11
12	#2	6", 8", 10" (DN150, DN200, DN250)	5	7	12
17	#2	12" (DN300)	2	0	2
24	#2	6" (DN150)	2	0	2

41 KCM configurations

Carbon steel, 304 SS and 316 SS configurations with flanged process connections. Piping arrangements and seal compounds vary by part number.

29 Global Filter cross-references

13 GMBE and 16 GMBV references are listed separately with their exact OEM identifiers. KCM part numbers and original product links remain consistent across this brochure and the website.

© 2026 Kcmfilter

STANDARDS & DOCUMENTATION

Define the Supply

Vessel design limits, piping interfaces and project documentation are separate parts of the specification.

Process connections

The listed flanges range from 2" (DN50) to 12" (DN300). Nominal inch/DN pairing identifies size; it does not establish flange drilling, pressure class, facing or interchangeability.

Pressure and temperature

Use the vessel pressure-temperature envelope for the selected material, seal and delivered configuration. Flange class, vessel pressure and allowable bag differential pressure are different limits.

Materials and finish

Listed wetted materials include carbon steel, 304 SS and 316 SS. Material records identify the delivered alloy and heat. Surface treatment and any specified roughness form part of the supply specification.

Code marks and certificates

ASME, PED/CE, drinking-water or food-contact requirements are specified for the exact order. OEM reference suffixes identify source configurations; they do not establish certification of a KCM supply.

Project documents

Order documentation may include the approved arrangement drawing, design data, material records and inspection or pressure-test reports defined in the quotation.

© 2026 Kcmfilter

CONSTRUCTION & FLOW

Inside the Vessel

One vessel contains several parallel bags. The bag ring, retaining hardware and vessel cover perform different sealing functions.

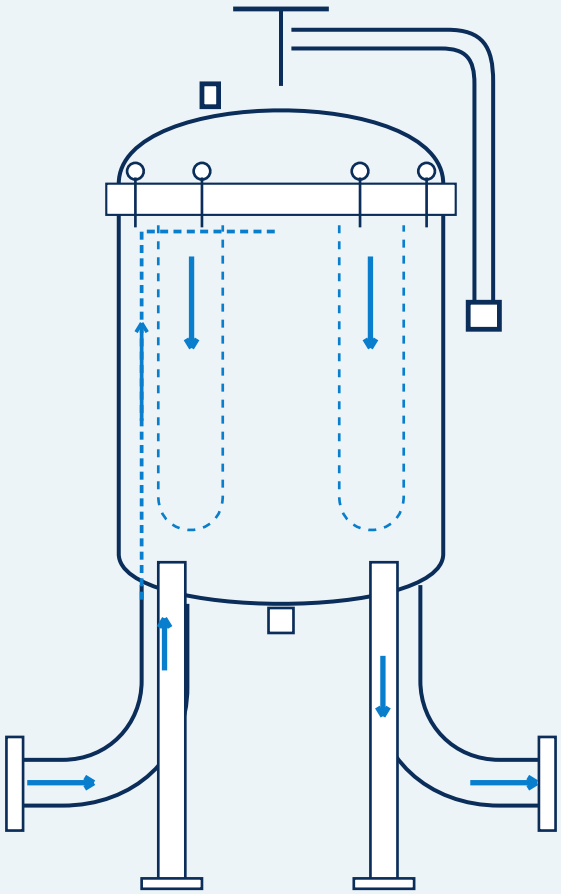

Illustrative flow path

Feed chamber

Liquid reaches the inside of each bag through the bag plate. A separate inlet opening or riser supplies the feed chamber on the illustrated layout.

Filter bags and baskets

Liquid passes through the bag media into the clean side. Perforated baskets support the bags; the media retains solids.

Bag retention

Ring geometry, basket seat and hold-down hardware form a matched arrangement. The retention system depends on the vessel family.

Vessel cover and drain

The cover gasket seals the vessel pressure boundary. Drain and vent locations follow the selected piping layout.

© 2026 Kcmfilter

FILTER BAGS & SEALS

Match the Internals

All listed housings accept size #2 bags. Ring geometry, support basket and retaining hardware are selected together.



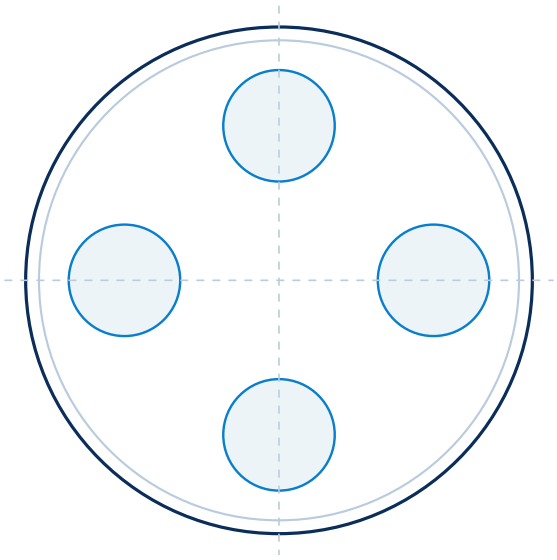

Four bag seats shown schematically

Bag media and support

Specify media type, micron rating, ring material and quantity. A nominal 30 in. (762 mm) basket depth does not define the bag overall length or top-ring geometry.

Seal compounds

NBR (Buna-N), EPDM, FKM and EPR cover-seal configurations are listed by part number. Select the specified compound for liquid chemistry, operating temperature and cleaning conditions. EPR denotes the listed ethylene-propylene seal.

© 2026 Kcmfilter

INSTALLATION & SERVICE

Allow the Service Space

The illustration identifies installation interfaces and service clearances. Dimensions and bag withdrawal space follow the selected arrangement drawing.

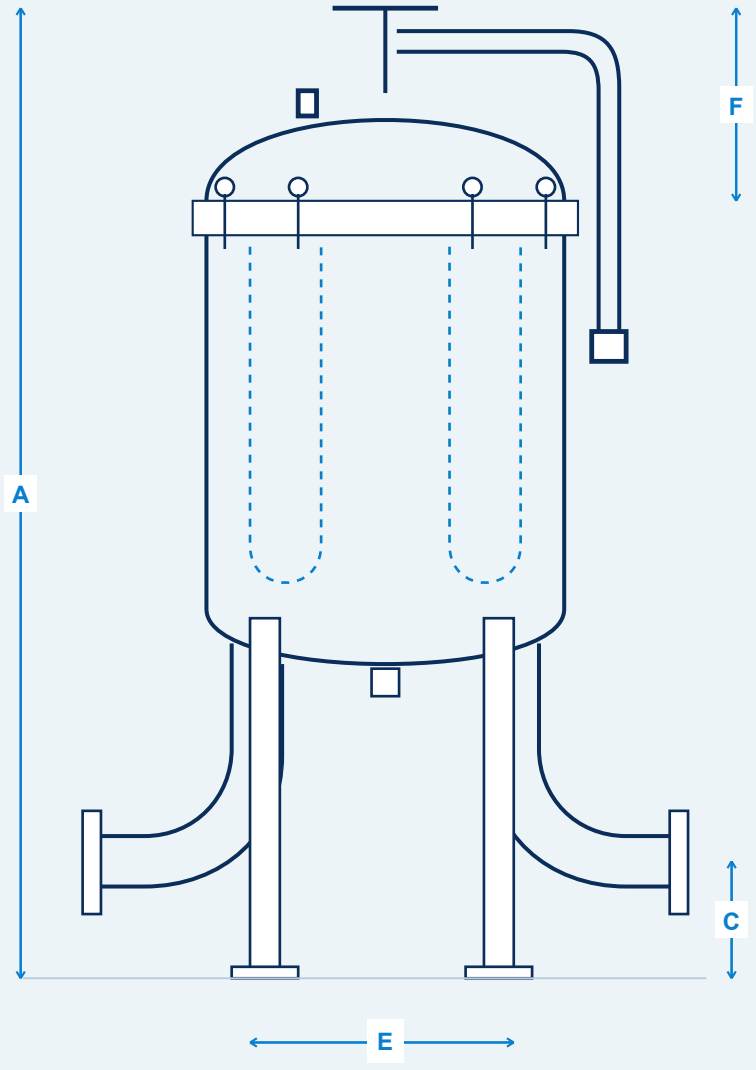

Reference elevation - not to scale

A - Overall height

Floor to the highest fixed point with the cover closed.

Vessel and flange span

Body diameter, nozzle projection and flange face-to-face space.

C - Pipe centerline

Inlet and outlet centerline heights and valve clearance.

E - Mounting footprint

Support-leg positions, anchor holes and access around the base.

F - Cover / davit space

Include cover lift and davit sweep. Full vertical basket withdrawal requires a separate overhead allowance.

© 2026 Kcmfilter

BAG PLATE / TOP VIEWS

Bag Positions & Access

Bag count is the number of filter bags, not every opening in the plate. A feed opening, drain or handling feature is not an additional bag position.

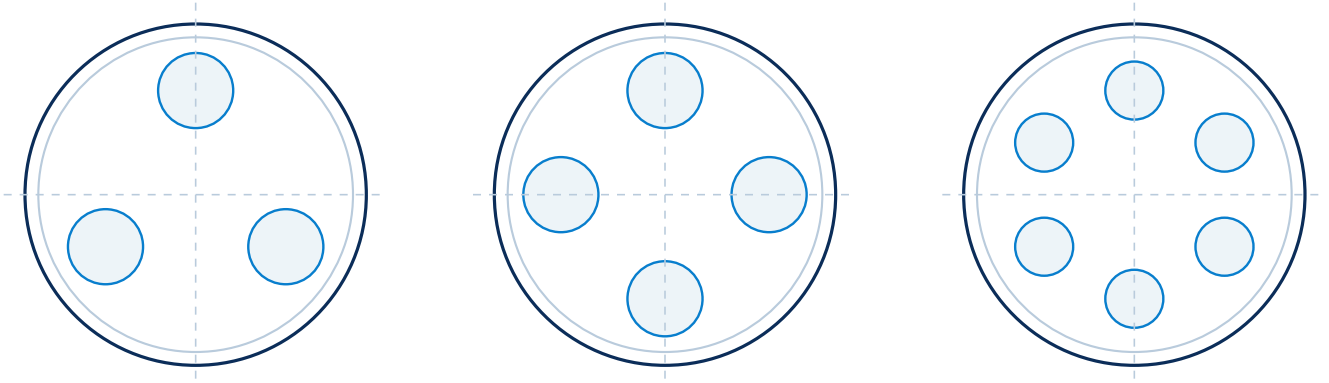

3 bag positions | 4 bag positions | 6 bag positions

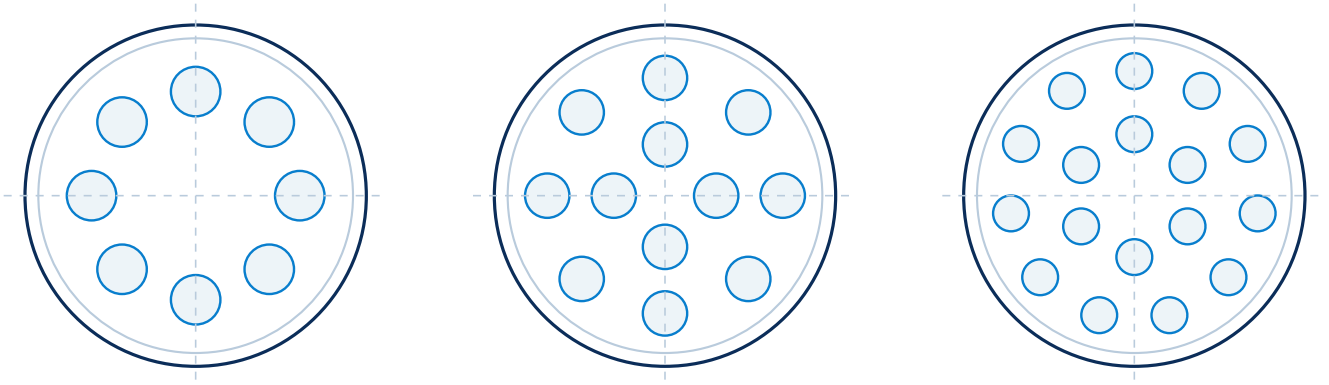

8 bag positions | 12 bag positions | 17 bag positions

Plan-view reference

Position patterns are schematic. The production plate, retaining hardware and cover swing follow the vessel drawing.

© 2026 Kcmfilter

STANDARD-BODY REFERENCE

4- & 6-Bag Dimensions

Reference for the illustrated standard-body family with nominal 30 in. (762 mm) baskets. Final nozzle positions and service dimensions follow the model drawing.

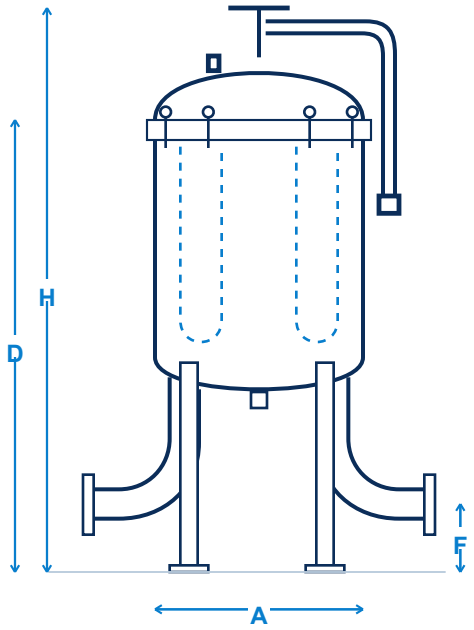

Drawing dimensions

D Floor to cover-flange elevation

H Overall closed height including davit

F Process connection centerline above floor

Inches first; millimeters in parentheses.

A - Nominal body diameter
4 bags: 22" (558.8 mm); 6 bags: 24" (609.6 mm).

Bags	Flange	D	H	F
4	2" (DN50)	41.4" (1,051.6 mm)	60" (1,524.0 mm)	4.5" (114.3 mm)
4	3" (DN80)	43.9" (1,115.1 mm)	62.4" (1,585.0 mm)	5.25" (133.3 mm)
4	4" (DN100)	46.2" (1,173.5 mm)	64.7" (1,643.4 mm)	6" (152.4 mm)
4	6" (DN150)	50.4" (1,280.2 mm)	69" (1,752.6 mm)	7" (177.8 mm)
6	2" (DN50)	41.7" (1,059.2 mm)	60.7" (1,541.8 mm)	4.5" (114.3 mm)
6	3" (DN80)	44.1" (1,120.1 mm)	63.1" (1,602.7 mm)	5.25" (133.3 mm)
6	4" (DN100)	46.5" (1,181.1 mm)	65.5" (1,663.7 mm)	6" (152.4 mm)
6	6" (DN150)	50.7" (1,287.8 mm)	69.7" (1,770.4 mm)	7" (177.8 mm)

© 2026 Kcmfilter

FLOW & PRESSURE REFERENCE

Size for the Duty

Source-family water-flow references are selection inputs. Media, viscosity, solids loading and delivered piping geometry determine the operating pressure drop.

Standard-body family reference

Reference Family	Bags	Water Flow	Reference Differential
4-bag standard body	4	400 US gpm (90.8 m³/h)	1 psid (0.069 bar)
6-bag standard body	6	600 US gpm (136.3 m³/h)	1 psid (0.069 bar)

Nominal water-flow basis for the standard basket-housing family, without added filter-bag media resistance. This is not a tested duty guarantee for all KCM-MB configurations.

GMBE / GMBV US-family reference

Bags	Maximum Water Flow - Empty Vessel
4	600 US gpm (136.3 m³/h)
6	1,200 US gpm (272.5 m³/h)
8	1,600 US gpm (363.4 m³/h)
12	2,400 US gpm (545.1 m³/h)

OEM F-flange family reference: water, without filter bags. These US-family values are kept separate from regional data. The listed source pressure class is 150 psi (10.3 bar); the source pressure-temperature envelope and selected seal govern the actual duty.

© 2026 Kcmfilter

SINGLE VESSEL / SIZE #2 BAGS

3-Bag Housings

Three size #2 bags in one vessel. Stainless and bottom-nozzle configurations are listed below.



Three basket seats shown open



Representative multi-bag vessel style

KCM Part Number	Housing	Process Connection	Seal
KCM-MB-S304-0016	304 SS	4" (DN100) Flange	FKM
KCM-MB-S304-0023	304 SS	4" (DN100) Flange	EPDM
KCM-MB-S304-0024	304 SS	4" (DN100) Flange	EPDM

© 2026 Kcmfilter

SINGLE VESSEL / SIZE #2 BAGS

4-Bag Housings

Ten KCM configurations with four size #2 bags. Select housing material, flange size and the recorded seal.



Materials

Carbon steel and 304 SS are listed.

Piping variants

Separate nozzle arrangements use distinct part numbers.

KCM Part Number	Housing	Process Connection	Seal
KCM-MB-CS-0001	Carbon Steel	3" (DN80) Flange	Buna-N
KCM-MB-CS-0002	Carbon Steel	4" (DN100) Flange	Buna-N
KCM-MB-CS-0003	Carbon Steel	6" (DN150) Flange	Buna-N
KCM-MB-S304-0003	304 SS	3" (DN80) Flange	Buna-N
KCM-MB-S304-0004	304 SS	3" (DN80) Flange	Buna-N
KCM-MB-S304-0005	304 SS	4" (DN100) Flange	Buna-N
KCM-MB-S304-0006	304 SS	4" (DN100) Flange	Buna-N
KCM-MB-S304-0007	304 SS	6" (DN150) Flange	Buna-N
KCM-MB-S304-0017	304 SS	4" (DN100) Flange	FKM
KCM-MB-S304-0025	304 SS	4" (DN100) Flange	EPDM

© 2026 Kcmfilter

SIX SIZE #2 BAGS

6-Bag Construction

The six-bag plate uses six basket positions around the feed opening. The open-cover reference shows the bag access and davit arrangement.



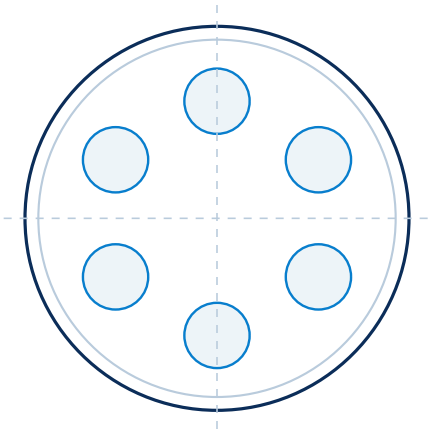

Six bag positions

Fourteen KCM selections

Carbon steel, 304 SS and 316 SS; 2" (DN50), 3" (DN80), 4" (DN100) or 6" (DN150) flanges by model. The following page lists each configuration.

© 2026 Kcmfilter

SIX SIZE #2 BAGS

6-Bag Model Selection

Each part number links to its original KCM product page. Piping-code variants in the standard family remain separate selections.

KCM Part Number	Housing	Process Connection	Seal
KCM-MB-CS-0004	Carbon Steel	2" (DN50) Flange	Buna-N
KCM-MB-CS-0005	Carbon Steel	3" (DN80) Flange	Buna-N
KCM-MB-CS-0006	Carbon Steel	4" (DN100) Flange	Buna-N
KCM-MB-CS-0007	Carbon Steel	6" (DN150) Flange	Buna-N
KCM-MB-CS-0008	Carbon Steel	6" (DN150) Flange	FKM
KCM-MB-S304-0008	304 SS	4" (DN100) Flange	Buna-N
KCM-MB-S304-0009	304 SS	4" (DN100) Flange	Buna-N
KCM-MB-S304-0010	304 SS	6" (DN150) Flange	Buna-N
KCM-MB-S304-0011	304 SS	6" (DN150) Flange	EPR
KCM-MB-S304-0012	304 SS	6" (DN150) Flange	FKM
KCM-MB-S304-0013	304 SS	6" (DN150) Flange	Buna-N
KCM-MB-S304-0026	304 SS	6" (DN150) Flange	Buna-N
KCM-MB-S304-0027	304 SS	6" (DN150) Flange	EPDM
KCM-MB-S316-0005	316 SS	6" (DN150) Flange	EPDM

Different nozzle arrangements use separate part numbers. The bag-ring style, basket support hardware and connection positions form part of the complete vessel configuration.

© 2026 Kcmfilter

SINGLE VESSEL / SIZE #2 BAGS

8-Bag Housings

Five KCM eight-bag selections. Compare the listed alloy and seal; the special bottom-outlet configuration retains its own part number.



Bag size

Eight size #2 bags per vessel.

Connections

All five listed KCM selections use 6" (DN150) flanges.

KCM Part Number	Housing	Process Connection	Seal
KCM-MB-S304-0014	304 SS	6" (DN150) Flange	EPDM
KCM-MB-S304-0015	304 SS	6" (DN150) Flange	Buna-N
KCM-MB-S304-0028	304 SS	6" (DN150) Flange	Buna-N
KCM-MB-S304-0029	304 SS	6" (DN150) Flange	EPDM
KCM-MB-S316-0006	316 SS	6" (DN150) Flange	EPDM

© 2026 Kcmfilter

SINGLE VESSEL / SIZE #2 BAGS

12-Bag Housings

Five KCM twelve-bag selections with 6" (DN150), 8" (DN200) or 10" (DN250) flanges.



Basket access

The illustrated cover swings clear of the bag plate.

Model selection

304 SS and 316 SS configurations are listed with their recorded EPDM seals.

KCM Part Number	Housing	Process Connection	Seal
KCM-MB-S304-0001	304 SS	10" (DN250) Flange	EPDM
KCM-MB-S304-0002	304 SS	10" (DN250) Flange	EPDM
KCM-MB-S304-0018	304 SS	8" (DN200) Flange	EPDM
KCM-MB-S304-0019	304 SS	6" (DN150) Flange	EPDM
KCM-MB-S316-0001	316 SS	6" (DN150) Flange	EPDM

© 2026 Kcmfilter

17- & 24-BAG VESSELS

Larger Bag Arrays

The two larger KCM groups use size #2 bags. Bag-position diagrams below show the stated count, not manufacturing dimensions.

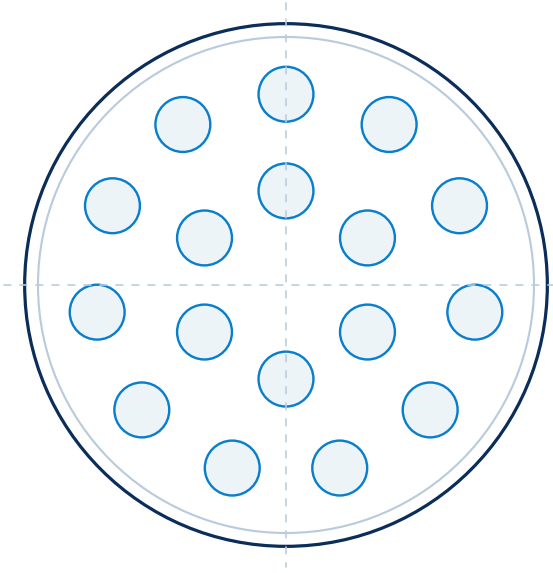

17 bags per vessel

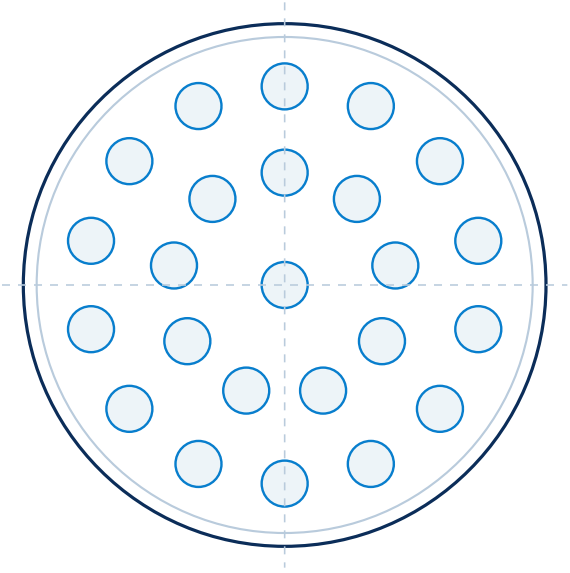

24 bags per vessel

KCM Part Number	Bags	Housing	Process Connection	Seal
KCM-MB-S304-0020	17	304 SS	12" (DN300) Flange	EPDM
KCM-MB-S304-0021	17	304 SS	12" (DN300) Flange	EPDM
KCM-MB-S304-0022	24	304 SS	6" (DN150) Flange	EPDM
KCM-MB-S316-0002	24	316 SS	6" (DN150) Flange	EPDM

© 2026 Kcmfilter

GLOBAL FILTER CROSS-REFERENCES

GMBE & GMBV Selection

These 29 KCM replacement selections retain their exact Global Filter references. They are separated from the 41 KCM configurations on the preceding pages.

Selection Group	GMBE Reference	GMBV Reference
Models listed	13	16
Bags per vessel	4, 6, 8 or 12	#2 bags: 4, 6, 8 or 12
Recorded materials	Carbon steel / 304 SS / 316 SS	304 SS / 316 SS
Access / retention	Swing-bolt cover; davit; V-ring seating	Swing-bolt cover; handwheel davit; V-ring seating
Reference suffixes	GB, EC and MC are retained	GB, U, V and MC are retained

Keep the complete reference

U identifies the source ASME-marking option; MC identifies the source drinking-water listing option. Complete reference identifiers distinguish these configurations even when bag count, alloy and flange size are the same.

Documentation for the delivered vessel

A reference to an OEM code-marked or listed configuration does not establish the certification of a replacement. Required marks, materials, test records and seal approvals are defined for the actual order.

© 2026 Kcmfilter

GLOBAL FILTER / GMBE REFERENCE

GMBE Reference Models

Thirteen cross-references. All use size #2 bags; exact OEM identifiers distinguish otherwise similar nominal configurations.

KCM Part Number	Global Filter Reference	Bags	Housing	Connection	Seal
KCM-MB-CS-0011	GMBE4304FC15EC	4	Carbon Steel	4" (DN100) RF Flange	Buna-N
KCM-MB-S304-0043	GMBE4304F415GB	4	304 SS	4" (DN100) RF Flange	Buna-N
KCM-MB-S316-0012	GMBE4304F615GB	4	316 SS	4" (DN100) RF Flange	Buna-N
KCM-MB-CS-0012	GMBE6306FC15EC	6	Carbon Steel	6" (DN150) RF Flange	Buna-N
KCM-MB-S304-0044	GMBE6304F415GB	6	304 SS	4" (DN100) RF Flange	Buna-N
KCM-MB-S304-0045	GMBE6306F415GB	6	304 SS	6" (DN150) RF Flange	Buna-N
KCM-MB-S304-0046	GMBE6306F415GB-MC	6	304 SS	6" (DN150) RF Flange	Buna-N
KCM-MB-S316-0013	GMBE6306F615GB	6	316 SS	6" (DN150) RF Flange	Buna-N
KCM-MB-S304-0047	GMBE8306F415GB	8	304 SS	6" (DN150) RF Flange	Buna-N
KCM-MB-S316-0014	GMBE8306F615GB	8	316 SS	6" (DN150) RF Flange	Buna-N
KCM-MB-S304-0041	GMBE12306F415GB	12	304 SS	6" (DN150) RF Flange	Buna-N
KCM-MB-S304-0042	GMBE12308F415GB	12	304 SS	8" (DN200) RF Flange	Buna-N
KCM-MB-S316-0011	GMBE12308F615GB	12	316 SS	8" (DN200) RF Flange	Buna-N

GB denotes the reference glass-bead finish; EC identifies the reference epoxy-coated carbon-steel exterior. MC identifies the source listing option. Housing material and seal selections follow the individual KCM part number.

© 2026 Kcmfilter

GLOBAL FILTER / GMBV REFERENCE

GMBV Reference Models 1

Exact source references, including U, V and MC suffixes, remain attached to their individual KCM part numbers.

KCM Part Number	Global Filter Reference	Bags	Housing	Connection	Seal
KCM-MB-S304-0051	GMBV4304F415GB	4	304 SS	4" (DN100) RF Flange	Buna-N
KCM-MB-S304-0052	GMBV4304F415GBU	4	304 SS	4" (DN100) RF Flange	Buna-N
KCM-MB-S316-0016	GMBV4304F615GBU	4	316 SS	4" (DN100) RF Flange	Buna-N
KCM-MB-S304-0053	GMBV6306F415GB	6	304 SS	6" (DN150) RF Flange	Buna-N
KCM-MB-S304-0054	GMBV6306F415GBU	6	304 SS	6" (DN150) RF Flange	Buna-N
KCM-MB-S316-0017	GMBV6306F615GB	6	316 SS	6" (DN150) RF Flange	EPDM
KCM-MB-S316-0018	GMBV6306F615GBU	6	316 SS	6" (DN150) RF Flange	Buna-N
KCM-MB-S316-0019	GMBV6306F615GBU-MC	6	316 SS	6" (DN150) RF Flange	EPDM

Separate configuration identifiers

The same bag count, alloy and flange size can occur with different OEM source configurations. Use the complete KCM part number and the full reference when requesting a replacement.

Piping and mounting

Flange drilling, face-to-face space, nozzle orientation and support-leg positions follow the vessel arrangement drawing.

© 2026 Kcmfilter

GLOBAL FILTER / GMBV REFERENCE

GMBV Reference Models 2

Exact source references, including U, V and MC suffixes, remain attached to their individual KCM part numbers.

KCM Part Number	Global Filter Reference	Bags	Housing	Connection	Seal
KCM-MB-S304-0055	GMBV8306F415GB	8	304 SS	6" (DN150) RF Flange	Buna-N
KCM-MB-S304-0056	GMBV8306F415GBU	8	304 SS	6" (DN150) RF Flange	Buna-N
KCM-MB-S316-0020	GMBV8306F615GBU	8	316 SS	6" (DN150) RF Flange	Buna-N
KCM-MB-S316-0021	GMBV8308F615GBU	8	316 SS	8" (DN200) RF Flange	Buna-N
KCM-MB-S304-0048	GMBV12308F415GB	12	304 SS	8" (DN200) RF Flange	Buna-N
KCM-MB-S304-0049	GMBV12308F415GBU	12	304 SS	8" (DN200) RF Flange	Buna-N
KCM-MB-S304-0050	GMBV12308F415GBV	12	304 SS	8" (DN200) RF Flange	Buna-N
KCM-MB-S316-0015	GMBV12308F615GBU	12	316 SS	8" (DN200) RF Flange	Buna-N

Separate configuration identifiers

The same bag count, alloy and flange size can occur with different OEM source configurations. Use the complete KCM part number and the full reference when requesting a replacement.

Service access

The cover swing and the complete vertical withdrawal of the bag or basket are separate installation allowances.

© 2026 Kcmfilter

SELECTION & SPARE PARTS

Ordering Guide

Choose a complete listed KCM part number, then supply the operating duty, installation details and project documentation requirements below.

Selection Field	Information to Supply
Housing selection	KCM part number; single vessel; bags per vessel
Filter bag	Size #2; media; micron rating; ring profile; quantity
Process interface	Flange size, drilling, pressure class, facing and nozzle orientation
Materials and seals	Housing alloy, wetted finish and the recorded cover-seal compound
Operating duty	Liquid, viscosity, temperature, normal / peak flow and pressure
Mechanical installation	Nozzle elevations, footprint and the service envelope
Reference replacement	Complete OEM reference and existing component details
Project documents	Approved drawing, design / test records and any specified marks

Spare-part identification

For baskets, seals and retaining hardware, supply the housing part number, component measurements, material and quantity. Bag rings, baskets and retaining devices are matched components.

© 2026 Kcmfilter

SALES INQUIRY

Request a Quote

Send the selected part number or the process and installation details for your application.

Part number and quantity

Include the complete KCM model, quantity and OEM reference where applicable.

Liquid and operating duty

State liquid chemistry, solids, viscosity, density, temperature, normal and peak flow, pressure and allowable differential pressure.

Mechanical installation

Supply the flange requirements, nozzle arrangement, mounting footprint and available cover / basket removal space.

Bags, seals and documents

Specify bag media and micron rating, ring type, seal compound and required documentation for the delivered configuration.

Kcmfilter is an independent manufacturer and is not affiliated with or endorsed by the referenced trademark owners. All third-party trademarks are the property of their respective owners.

Published specifications apply to the configurations and operating conditions stated in this brochure; final supply is defined by the agreed quotation and approved drawings.

Contact Kcmfilter
sales@kcmfilter.com

View KCM-MB Range
+1 (934) 234-9228

© 2026 Kcmfilter