KCM-PB

Plastic Single Bag Filter Housings

PP, PPH, PPR, PVDF, GFPP, PVC and CPVC housings for liquid filtration.



Size #1 / #2 bags and compact 10 / 20 in. housings

Technical specifications

Materials, bag sizes and connections.

Model selection

25 linked housing configurations.

Sales & engineering

Drawings, duty data and quotations.

© 2026 Kcmfilter

CONTENTS

Technical Catalog

Thermoplastic single-bag filter housings: materials, connections, installation dimensions and operating data.

Plastic bag filter housing range 03
Materials, applications and nominal connection sizes.

Internal construction and cover types 04
Filter bag, support basket, cover seal and closures.

Flanged PP, PPR and PVDF housings 06
Threaded cover, flat swing-bolt and domed top-entry configurations.

PP housings with NPT connections 09
Spin-off cover; size #1 and #2 filter bags.

GFPP, PVC and CPVC bag filter housings 10
Universal in-line or loop piping configurations.

Compact PP and flanged bottom-out housings 12
10 / 20 in. housings; GFPP and PVDF size #2 models.

Installation dimensions 14
Front elevation, mounting details and basket withdrawal clearance.

Operating pressure, temperature and flow 16
Model-specific reference conditions and flow capacities.

Filter bags, spare parts and model selection 18
Bag dimensions, seals, accessories and part-number table.

Request a quotation 20
Application data and Kcmfilter contact details.

© 2026 Kcmfilter

THERMOPLASTIC LIQUID FILTRATION

Plastic Bag Filter Housings

KCM-PB housings contain one replaceable filter bag. The range includes PP, PPH, PPR, PVDF, glass-reinforced PP, PVC and CPVC configurations.

Inlet / outlet layout	Housing material	Bag size	Models	Page
Side in / side out	PP, PPR or PVDF	#1 / #2	6	06-07, 09
Top in / side out	PPH, PPR or PVDF	#2	3	08
In-line or loop	GFPP, PVC or CPVC	#1 / #2	10	10-11
Compact in-line	PP	10 / 20 in.	4	12
Side in / bottom out	GFPP or PVDF	#2	2	13

Applications

Process water, chemical solutions and prefiltration ahead of finer filtration stages. Material suitability depends on the liquid, concentration, cleaning chemistry and operating temperature.

Housing materials

PPH: polypropylene homopolymer. PPR: polypropylene random copolymer. GFPP: glass-reinforced polypropylene. FKM (FPM): fluoroelastomer seals.

Connection designations

Inch / DN pairs indicate nominal size: 1" (DN25), 1-1/2" (DN40), 2" (DN50), 2-1/2" (DN65) and 3" (DN80). DN size does not specify DIN / EN flange drilling. Flange standards and thread forms are listed separately where documented.

© 2026 Kcmfilter

INTERNAL CONSTRUCTION

Bag, Basket & Seal

Typical single-bag assembly: cover, seal, bag retainer, filter bag, support basket and vessel. Components vary with the closure and housing material.

ASSEMBLY SCHEMATIC

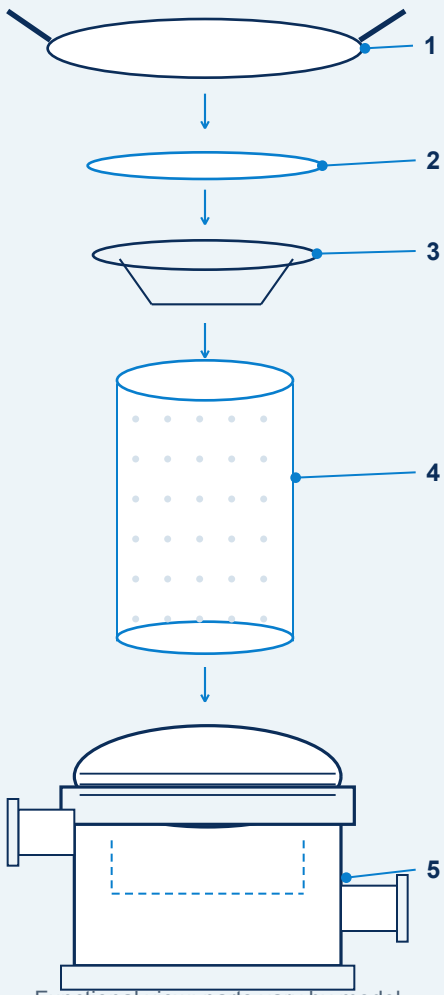

Functional view; parts vary by model.

1 Cover

Threaded or swing-bolt closure.

2 Cover seal

Seal between the cover and housing flange.

3 Bag retainer

Retaining part locates the bag collar within the basket opening.

4 Bag and basket

Filter media captures solids; the basket supports the bag.

5 Vessel and ports

Inlet, outlet, vent and drain connections.

Replacement parts are identified by the housing part number and bag size.

© 2026 Kcmfilter

THERMOPLASTIC SINGLE-BAG HOUSINGS

Cover Types & Connections

Threaded and swing-bolt closures. Side-inlet and top-entry configurations with flanged connections.



Threaded Cover

Closure: Threaded, integral handles
Material: PP
Bag Size: #1 or #2
Connection: 2" (DN50) flange

Page 06



Flat Swing-Bolt Cover

Closure: Swing bolts
Material: PPR or PVDF
Bag Size: #2
Connection: 2" (DN50) flange

Page 07



Domed Swing-Bolt Cover

Closure: Swing bolts; top entry
Material: PPH, PPR or PVDF
Bag Size: #2
Connection: 2-1/2" (DN65) flange

Page 08

Cover opening

Isolate, depressurize and drain the vessel before releasing the closure.

© 2026 Kcmfilter

THREADED COVER / SIDE INLET

PP Bag Filter Housings

Polypropylene single-bag housings with a threaded cover and 2" (DN50) flanged inlet and outlet.



HOUSING MATERIAL
Polypropylene (PP)

CLOSURE
Threaded cover with integral handles

BAG SIZE
#1 or #2

INLET / OUTLET
Side in / side out

CONNECTION
2" (DN50) ANSI flange

COVER SEAL
FKM (#1 model) / EPDM (#2 model)

KCM Part Number	Material	Bag Size	Connection	Seal
KCM-PB-PP-0003	PP	#1	2" (DN50) Flange	FKM
KCM-PB-PP-0004	PP	#2	2" (DN50) Flange	EPDM

Bag dimensions: #1, 7 × 16 in. (178 × 406 mm); #2, 7 × 32 in. (178 × 813 mm). The part number identifies the bag size and listed seal.

© 2026 Kcmfilter

FLAT SWING-BOLT COVER / SIDE INLET

PPR & PVDF Bag Housings

Single-bag housings for one size #2 filter bag, with a flat swing-bolt cover and 2" (DN50) side connections.



HOUSING MATERIAL
PPR or PVDF

CLOSURE
Flat swing-bolt cover

BAG SIZE
#2: 7 × 32 in. (178 × 813 mm)

INLET / OUTLET
Side in / side out

CONNECTION
2" (DN50) flange

COVER SEAL
EPDM (PPR) / PTFE (PVDF)

KCM Part Number	Material	Bag Size	Connection	Seal
KCM-PB-UN-0005	PPR	#2	2" (DN50) Flange	EPDM
KCM-PB-PVDF-0001	PVDF	#2	2" (DN50) Flange	PTFE

UN-0005: PPR housing, EPDM seal and ANSI-pattern flanged connections. PVDF-0001: PVDF housing with PTFE seal.

© 2026 Kcmfilter

DOMED SWING-BOLT COVER / TOP ENTRY

Top-Entry Bag Housings

PPH, PPR and PVDF single-bag housings with a domed swing-bolt cover, top-entry inlet and side outlet.



HOUSING MATERIAL
PPH / PPR / PVDF

CLOSURE
Domed swing-bolt cover

BAG SIZE
#2

CONNECTION
2-1/2" (DN65) flange

COVER SEAL
FKM (PPH / PVDF); Buna-N (PPR)

REFERENCE FLOW
176 US gpm (40 m³/h)

KCM Part Number	Material	Bag Size	Connection	Seal
KCM-PB-PPH-0001	PPH	#2	2-1/2" (DN65) Flange	FKM
KCM-PB-PPR-0001	PPR	#2	2-1/2" (DN65) Flange	Buna-N
KCM-PB-PVDF-0003	PVDF	#2	2-1/2" (DN65) Flange	FKM

PVDF-0003: ASME B16.5 Class 150 flange. PPH / PPR flange drilling is specified on the model drawing. PPH installation dimensions: page 14.

© 2026 Kcmfilter

SPIN-OFF COVER / NPT CONNECTIONS

PP NPT Bag Filter Housings

Polypropylene housings with a spin-off cover, side inlet and side outlet. One size #1 or #2 filter bag per vessel.



HOUSING MATERIAL
Polypropylene (PP)

CLOSURE
Hand-removable spin-off cover

BAG SIZE
#1 (PP-0001) / #2 (PP-0002)

CONNECTION
2" (DN50) NPT

COVER SEAL
FKM

KCM Part Number	Material	Bag Size	Connection	Seal
KCM-PB-PP-0001	PP	#1	2" (DN50) NPT	FKM
KCM-PB-PP-0002	PP	#2	2" (DN50) NPT	FKM

Flanged PP threaded-cover housings are listed on page 06. Filter bag dimensions and replacement parts are listed on page 18.

© 2026 Kcmfilter

INTERRUPTED-THREAD COVER / IN-LINE OR LOOP

GFPP Bag Filter Housings

Glass-reinforced polypropylene housings for size #1 or #2 filter bags, with universal in-line or loop piping arrangements.



HOUSING MATERIAL
Glass-reinforced polypropylene (GFPP)

CLOSURE
Interrupted-thread cover

PIPING LAYOUT
In-line or loop

STANDARD SEAL / OPTION
FKM / EPDM

KCM Part Number	Material	Bag Size	Connection	Seal
KCM-PB-GPP-0001	GFPP	#1	2" (DN50) Flange	FKM
KCM-PB-GPP-0002	GFPP	#2	2" (DN50) NPT	FKM
KCM-PB-GPP-0003	GFPP	#2	3" (DN80) Flange	FKM
KCM-PB-PP-0005	GFPP	#1	2" (DN50) NPT	FKM
KCM-PB-UN-0006	GFPP	#2	2" (DN50) Threaded	FKM / EPDM
KCM-PB-UN-0007	GFPP	#2	2" (DN50) Flange	FKM
KCM-PB-UN-0008	GFPP	#2	3" (DN80) NPT	FKM

Nominal connections: 2" (DN50) or 3" (DN80), as listed. UN-0006 thread form and FKM / EPDM seal configuration are specified with the order.

© 2026 Kcmfilter

THREADED COVER / IN-LINE OR LOOP

PVC & CPVC Bag Housings

PVC and CPVC single-bag housings with threaded covers, FKM seals and size #1 or #2 filter bags.



PVC / CPVC threaded-cover housings



CPVC #2 housing

KCM Part Number	Material	Bag Size	Connection	Seal
KCM-PB-CPVC-0001	CPVC	#1	1-1/2" (DN40) Socket/Threaded	FKM
KCM-PB-CPVC-0002	CPVC	#2	2" (DN50) Socket/Threaded	FKM
KCM-PB-PVC-0001	PVC	#1	2" (DN50) Flange	FKM

Socket / threaded and flanged connections are model-specific. Universal piping supports an in-line or loop arrangement.

© 2026 Kcmfilter

ACME THREADED COVER / NPT CONNECTIONS

Compact PP Bag Housings

Polypropylene in-line housings in nominal 10 and 20 in. lengths, with 1" (DN25) or 1-1/2" (DN40) NPT connections.



CLOSURE
ACME threaded cover

10 IN. HOUSING
4 × 8.25 in. bag (102 × 210 mm)

20 IN. HOUSING
4 × 18.25 in. bag (102 × 464 mm)

LISTED SEAL
Buna-N

KCM Part Number	Material	Housing Length	Connection	Seal
KCM-PB-PP-0006	PP	20 in.	1-1/2" (DN40) NPT	Buna-N
KCM-PB-PP-0007	PP	10 in.	1-1/2" (DN40) NPT	Buna-N
KCM-PB-PP-0008	PP	10 in.	1" (DN25) NPT	Buna-N
KCM-PB-PP-0009	PP	20 in.	1" (DN25) NPT	Buna-N

Four unique housing / connection combinations are listed. Nominal housing length and actual filter bag length are shown separately.

© 2026 Kcmfilter

BUTTRESS-THREAD COVER / BOTTOM OUTLET

GFPP & PVDF Bag Housings

Size #2 single-bag housings with an external buttress-thread cover and 2" (DN50) ASME B16.5 Class 150 flat-face flanges.



Shown with alternate side connections

HOUSING / BASKET
GFPP / natural PP, or PVDF / PVDF

BAG SIZE
#2

PIPING LAYOUT
Side in / bottom out; alternate side outlet

LISTED SEAL
Buna-N; EPDM, FKM or FKM/FEP options

REFERENCE FLOW
Up to 100 US gpm (22.7 m³/h)

KCM Part Number	Material	Bag Size	Connection	Seal
KCM-PB-GPP-0004	GFPP	#2	2" (DN50) Flange	Buna-N
KCM-PB-PVDF-0002	PVDF	#2	2" (DN50) Flange	Buna-N

Technical data

Installation dimensions and basket withdrawal clearance: page 15. Pressure / temperature data: page 16.

© 2026 Kcmfilter

INSTALLATION REFERENCE

PPH Reference Drawing

KCM-PB-PPH-0001: front elevation and base mounting plan. Reference dimensions in millimeters and inches.

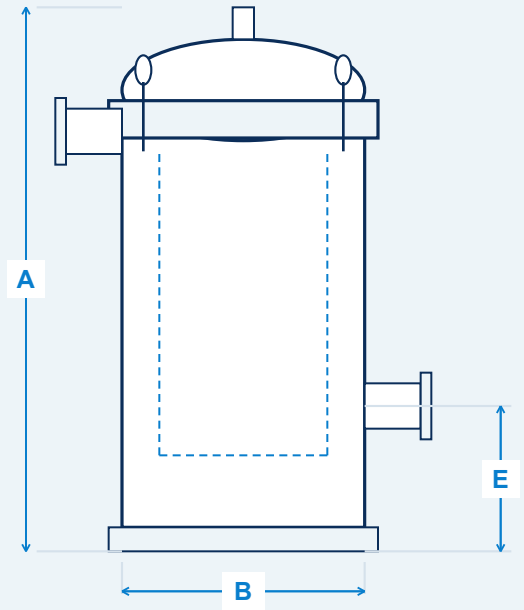

Front elevation; gauge excluded

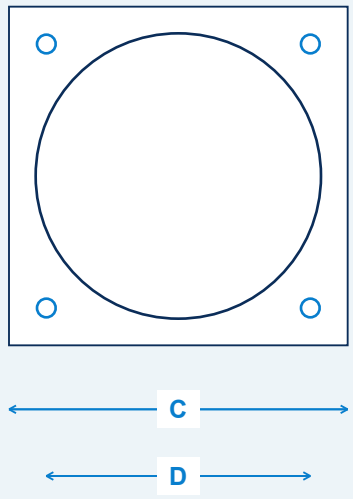

Base mounting plan

Ref.	Dimension / connection	Metric	Imperial
A	Top-cover reference height	1,062 mm	41.81 in.
B	Body outside diameter	223 mm	8.78 in.
C	Base width / depth	255 mm	10.04 in.
D	Anchor-hole pitch	200 mm	7.87 in.
E	Outlet centerline above base	150 mm	5.91 in.
-	Mounting hole diameter	19 mm	0.75 in.
-	Inlet / outlet	DN65 flange	2-1/2 in. nominal
-	Cleaning / drain connection	Rc 1/2	1/2 in. nominal

Reference dimensions; the approved drawing governs installation. Top-cover height excludes the pressure gauge. Basket withdrawal requires additional space above the cover.

© 2026 Kcmfilter

INSTALLATION REFERENCE

Flanged #2 Installation

KCM-PB-GPP-0004 and KCM-PB-PVDF-0002: size #2 housings with a standard bottom outlet and alternate side outlet.

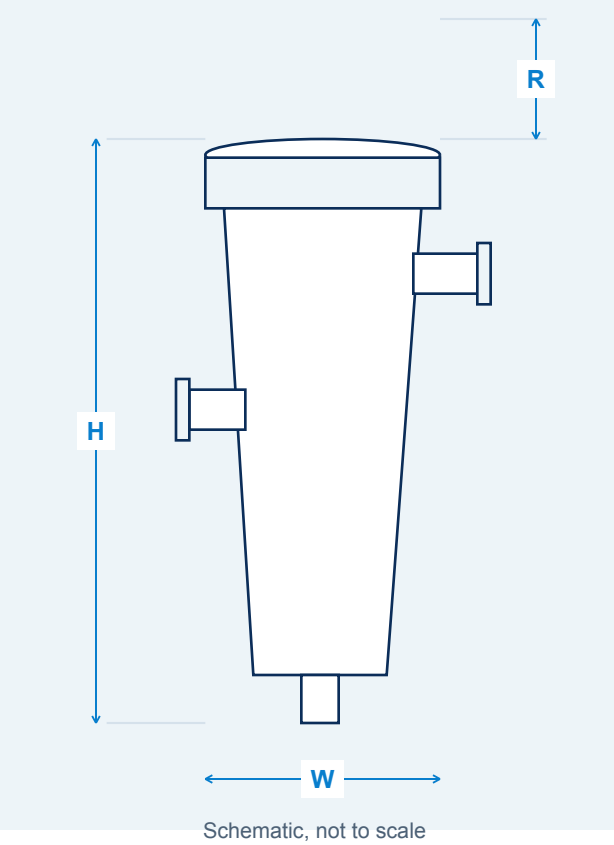

Schematic, not to scale

Bag removal

R is the reference basket withdrawal distance above the cover.

Outlet selection

Standard bottom outlet; alternate side outlet. Unused connections require the specified plugs.

Flange mating

2" (DN50) ASME B16.5 Class 150 flat-face flange.

Ref.	Drawing item	Metric / connection	Imperial / detail
H	Reference overall height	914 mm	36 in.
R	Basket clearance above cover	660 mm	26 in.
W	Cover width	489 mm	19-1/4 in.
-	Body reference width	381 mm	15 in.
-	Inlet / outlet	DN50 / Class 150	2" flat-face flange
-	Gauge / cover port	1/4" NPT	Model-specific quantity
-	Drain port	3/4 in. NPT	With plug

Reference dimensions; the approved drawing governs installation.

© 2026 Kcmfilter

MODEL-SPECIFIC OPERATING DATA

Pressure & Temperature

Published reference conditions for the listed configurations. Pressure-at-temperature ratings are stated as paired values.

KCM Part Number	Material	Reference pressure / temperature	Metric equivalent
KCM-PB-GPP-0004	GFPP	100 psi at 150°F	6.9 bar at 65.6°C
KCM-PB-PVDF-0002	PVDF	100 psi at 150°F	6.9 bar at 65.6°C

Pressure-temperature relationship

Allowable pressure depends on the polymer, process temperature, seal and complete vessel configuration. A Class 150 flange designation is a connection specification; it is not a 150 psi plastic-housing rating.

ADDITIONAL TEMPERATURE REFERENCES

KCM Part Number	Material	Reference max. temperature	Metric
KCM-PB-PPH-0001	PPH	194°F	90°C
KCM-PB-PVDF-0003	PVDF	248°F	120°C
KCM-PB-UN-0005	PPR	140°F	60°C

Temperature values in this second table are independent catalog references, not simultaneous maximum-pressure / maximum-temperature ratings.

Operating data sheet

The quoted assembly's pressure-temperature rating governs service. Pressure surges, cleaning temperature and seal compatibility are part of the duty specification.

© 2026 Kcmfilter

FLOW CAPACITY & DIFFERENTIAL PRESSURE

Flow & Pressure Drop

Catalog reference flows by part number. Actual pressure drop depends on the housing, filter bag, liquid viscosity and solids loading.

KCM Part Number	Reference flow	Metric flow
KCM-PB-GPP-0004	Up to 100 US gpm	22.7 m³/h
KCM-PB-PVDF-0002	Up to 100 US gpm	22.7 m³/h
KCM-PB-PPH-0001	176 US gpm	40 m³/h
KCM-PB-PPR-0001	176 US gpm	40 m³/h
KCM-PB-PVDF-0003	176 US gpm	40 m³/h
KCM-PB-UN-0005	176 US gpm	40 m³/h

Flow values are catalog capacity references. Empty-housing, clean-bag and loaded-bag pressure drops are different operating conditions.

Vessel pressure

Internal system pressure, limited by the housing's pressure-temperature rating.

Differential pressure

Inlet pressure minus outlet pressure. This value includes the resistance of the housing and filter media.

Filter bag change-out

GPP-0004 and PVDF-0002: 15 psid (1.03 bar differential) reference change-out value. The bag's service limit and the selected media govern change-out for other configurations.

© 2026 Kcmfilter

FILTER BAGS, SEALS & ACCESSORIES

Filter Bags & Spare Parts

Bag dimensions and replacement components for single-bag housings. The housing part number identifies the applicable assembly.

Bag / housing	Nominal bag dimensions	Metric equivalent	Applicable models
#1	7 × 16 in.	178 × 406 mm	Side-port / Universal #1 models
#2	7 × 32 in.	178 × 813 mm	Side-port, top-entry and bottom-out #2 models
10 in. housing	4 × 8.25 in.	102 × 210 mm	PP-0007 / PP-0008
20 in. housing	4 × 18.25 in.	102 × 464 mm	PP-0006 / PP-0009

Metric values are rounded inch conversions. PPH-0001 and PPR-0001 list 180 × 810 mm nominal #2 bags. Collar profile and basket dimensions determine the replacement bag.

Cover and basket seals

Buna-N, EPDM, FKM, PTFE and FKM/FEP, according to the model. Seal sets are supplied for the specified housing and process liquid.

Baskets and retainers

Replacement support basket, bag retainer and collar-seating components. Basket material and retaining geometry are model-specific.

Accessories / supplied scope

Pressure gauges, vent and drain fittings, plugs, mounting hardware and filter bags are itemized with the quotation.

© 2026 Kcmfilter

LINKED PART-NUMBER TABLE

Model Selection Table

25 housing configurations. Each part number links to its product page; page references locate the illustrated specifications.

KCM Part Number	Material	Bag Size*	Connection	Seal	Page
KCM-PB-PP-0001	PP	#1	2" (DN50) NPT	FKM	09
KCM-PB-PP-0002	PP	#2	2" (DN50) NPT	FKM	09
KCM-PB-PP-0003	PP	#1	2" (DN50) Flange	FKM	06
KCM-PB-PP-0004	PP	#2	2" (DN50) Flange	EPDM	06
KCM-PB-PVDF-0001	PVDF	#2	2" (DN50) Flange	PTFE	07
KCM-PB-UN-0005	PPR	#2	2" (DN50) Flange	EPDM	07
KCM-PB-PPH-0001	PPH	#2	2-1/2" (DN65) Flange	FKM	08
KCM-PB-PPR-0001	PPR	#2	2-1/2" (DN65) Flange	Buna-N	08
KCM-PB-PVDF-0003	PVDF	#2	2-1/2" (DN65) Flange	FKM	08
KCM-PB-CPVC-0001	CPVC	#1	1-1/2" (DN40) Socket/Threaded	FKM	11
KCM-PB-CPVC-0002	CPVC	#2	2" (DN50) Socket/Threaded	FKM	11
KCM-PB-GPP-0001	GFPP	#1	2" (DN50) Flange	FKM	10
KCM-PB-GPP-0002	GFPP	#2	2" (DN50) NPT	FKM	10
KCM-PB-GPP-0003	GFPP	#2	3" (DN80) Flange	FKM	10
KCM-PB-PP-0005	GFPP	#1	2" (DN50) NPT	FKM	10
KCM-PB-PVC-0001	PVC	#1	2" (DN50) Flange	FKM	11
KCM-PB-UN-0006	GFPP	#2	2" (DN50) Threaded	FKM / EPDM	10
KCM-PB-UN-0007	GFPP	#2	2" (DN50) Flange	FKM	10
KCM-PB-UN-0008	GFPP	#2	3" (DN80) NPT	FKM	10
KCM-PB-PP-0006	PP	20 in.*	1-1/2" (DN40) NPT	Buna-N	12
KCM-PB-PP-0007	PP	10 in.*	1-1/2" (DN40) NPT	Buna-N	12
KCM-PB-PP-0008	PP	10 in.*	1" (DN25) NPT	Buna-N	12
KCM-PB-PP-0009	PP	20 in.*	1" (DN25) NPT	Buna-N	12
KCM-PB-GPP-0004	GFPP	#2	2" (DN50) Flange	Buna-N	13
KCM-PB-PVDF-0002	PVDF	#2	2" (DN50) Flange	Buna-N	13

*10 / 20 in. entries are nominal housing lengths; actual bag dimensions are on page 18. GFPP = glass-reinforced polypropylene. FKM (FPM) = fluoroelastomer.

© 2026 Kcmfilter

SALES & APPLICATION ENGINEERING

Request a Quotation

Housing selection and pricing: part number, process duty, connections and required documentation.

Housing configuration

KCM part number, quantity, housing material, bag size, closure and inlet / outlet layout.

Filtration duty

Liquid and concentration; cleaning chemicals; viscosity; normal / peak flow; bag media and micron rating.

Operating and installation data

Operating / design pressure and temperature; allowable differential pressure; connection standard; service clearance.

Supplied scope

Seal compound, basket, gauges, fittings and bags; dimensional drawings; testing and documentation requirements.

Specifications are subject to change. Chemical compatibility and the approved configuration determine the operating limits.

Contact Kcmfilter

sales@kcmfilter.com

KCM-PB Product Range

+1 (934) 234-9228

© 2026 Kcmfilter