KCM-SB

Single Bag Filter Housings

Single-vessel liquid filtration. Compare selected configurations by piping layout, bag size, material, connection and pressure.



Representative KCM-SB housing configurations

Select a layout

Compare connections and service access.

Find a model

52 configurations with selection differences.

Request a quote

Send your process and installation details.

© 2026 Kcmfilter

CONTENTS

Selection Guide

Start with the piping layout and bag size, then compare pressure, materials and configuration details.

Range and selection 03

Piping arrangements, bag sizes and project requirements.

Construction and flow 05

Filter bag, basket, sealing and piping arrangements.

Connections and installation 09

Connection types, basket sizes, drawings and service access.

Flow and pressure selection 14

Operating data to use when sizing the selected housing.

Top-entry housings 15

Gooseneck inlets, dimension sets and KCM model tables.

Bags, seals and ordering 18

Bag sizes, seal compounds and a one-page ordering guide.

Selected model tables 20

52 configurations with pressure and distinguishing features.

Request a quote 25

Application details and direct contact information.

© 2026 Kcmfilter

KCM-SB RANGE

Choose the Layout

Use these piping arrangements to shortlist a housing. The selected model tables show 52 configurations with pressure and construction differences.

Piping Layout	Bag Sizes Shown	Selection Pages
Side In, Bottom / Lower-Side Out	#1, #2, #4, #7, #8, #9	20-22
Side In, Side Out	#2, #3, #4, #8	20-22
Universal Outlet	#1 and #2	23
Loop Layout	#1 and #2	23
In-Line Layout	#1 and #2	23
Top In, Bottom Out	#1, #2, Size 10, Size 20	24

Select the bag size and ring

Match the basket diameter and depth, ring profile and retaining method. Size 10 and Size 20 use their stated molded-ring bag details.

Compare the complete configuration

Pressure, nozzle position, support legs, basket type and gauge ports distinguish configurations alongside connection size and seal material.

© 2026 Kcmfilter

STANDARDS & DOCUMENTATION

Specify the Requirements

Connection details, operating limits and project documents define the required housing configuration.

Connections and flange details

Specify nominal size, thread form, flange drilling, facing and pressure class or PN designation. The Size 10/20 gooseneck configurations use 2 in. (DN50) PN16 flanges.

Vessel limits and operating conditions

State operating pressure and temperature, design conditions, normal and peak flow, and allowable pressure drop. Use the pressure-temperature limit quoted for the specific housing and seal.

Materials and finish

Use the recorded grade: carbon steel, aluminum, 304 SS, 316 SS or 316L SS. Identify wetted components, basket and seal separately. Specify the required surface treatment and its internal or external scope.

Documents to include with the quotation

List your requirements for the approved dimensional drawing, material records, inspection or pressure-test records, and any project-specific conformity documentation. Specify the destination and applicable design requirements.

Order documentation

Include required markings, material records and inspection documents with the project inquiry.

© 2026 Kcmfilter

HOUSING CONSTRUCTION

Inside the Housing

A filter bag sits in a perforated support basket. The illustration shows a representative side-inlet configuration.



Cover and instruments

Swing-bolt cover with illustrated pressure gauge and vent arrangement.

Bag retention

The retaining assembly seats the bag ring against the housing seat.

Bag and support basket

The bag provides the filtration medium. The basket supports it against differential pressure.

Outlet and drain

Clean liquid leaves through the outlet. The low-point drain supports emptying before service.

Illustrated assembly. Closure, ports and accessories vary by part number.

© 2026 Kcmfilter

FILTRATION AND SEALING

Follow the Liquid Path

Bag-ring seating, the support basket and the cover seal perform distinct functions.

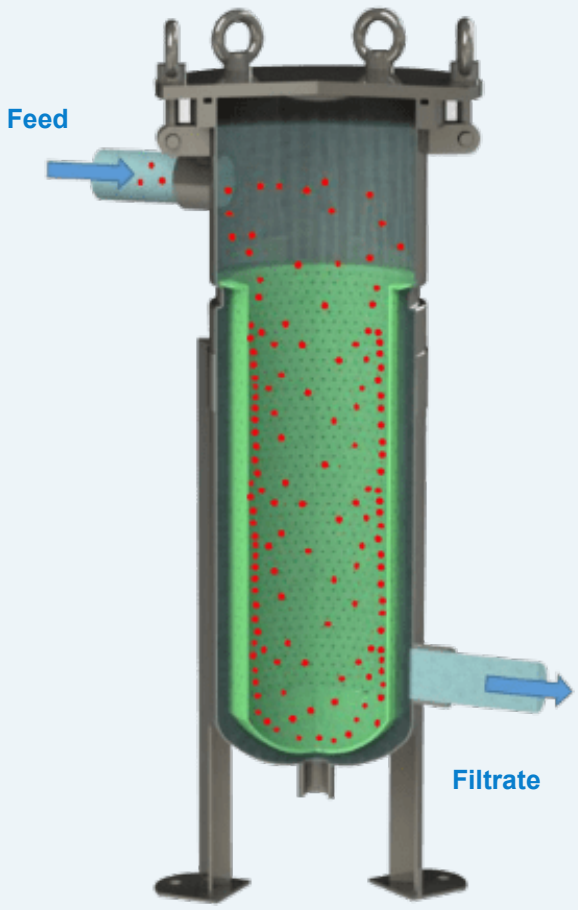

Illustrative filtration flow

Inside-to-outside flow

Liquid enters the bag interior. It passes through the filter medium and support basket, then collects on the clean side of the housing. Solids remain inside the bag.

Ring seal and seating

The bag ring seats at the housing opening. The retaining hardware holds it against the seat; the basket supports the filter medium.

Cover seal

The lid seal closes the pressure boundary. Seal compounds include NBR (Buna-N), EPDM and FKM, selected for the liquid and operating conditions.

Media selection

Specify bag material and micron rating, or basket mesh and opening size, with the housing part number.

© 2026 Kcmfilter

PIPING ARRANGEMENTS

Side-Inlet Housings

Compare the installed pipe routes and the clearances needed for the cover, basket and drain.

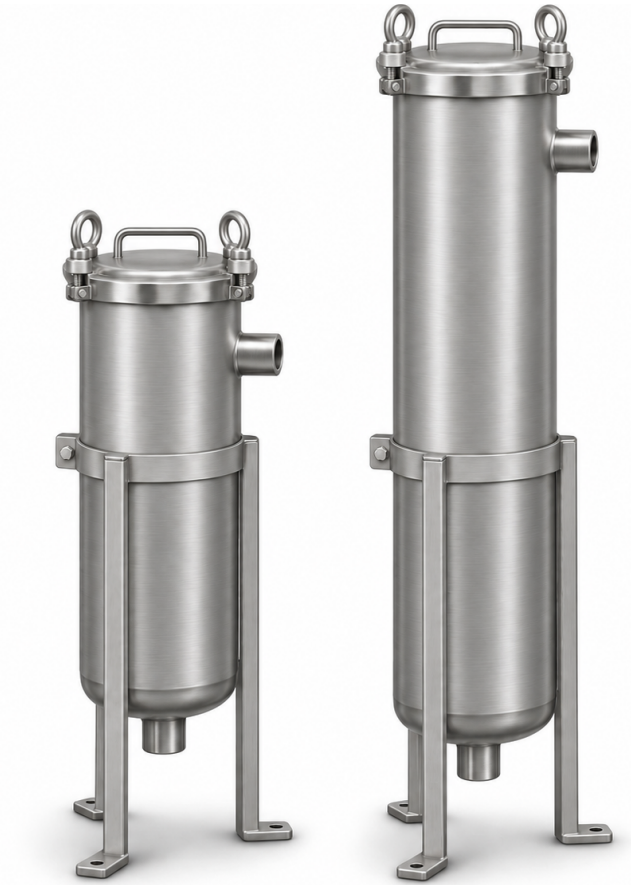

Side In, Bottom Out

17 selected configurations

A lower outlet routes filtrate beneath the vessel. Pipework occupies space between the support legs.

Representative arrangement



Side In, Side Out

11 selected configurations

A side outlet routes filtrate through the vessel wall, with nozzle elevation determined by the selected configuration.

Representative arrangement

© 2026 Kcmfilter

PIPING ARRANGEMENTS

Other Outlet Layouts

Universal outlets, same-side loop ports and opposed in-line ports offer different routes for connected pipework.



Universal Outlet

6 selected models

Selected models: page 23



Loop Layout

4 selected models

Selected models: page 23



In-Line Layout

4 selected models

Selected models: page 23

Installation check

Universal configurations have alternative outlet positions. The selected process outlet, unused-port closure and low-point drain form part of the piping arrangement.

© 2026 Kcmfilter

CONNECTION SELECTION

Threaded or Flanged

Match the connection specification to the mating pipework. The open-cover views also show the filter bag, basket rim and cover seal.





Threaded Connection

Threaded configurations state nominal pipe size and actual thread form, including NPT or FNPT where specified.

Flanged Connection

A flange specification includes nominal size, drilling standard, class or PN, facing and gasket; nominal inch/DN size alone does not define interchangeability.

Bag seating and cover seal

The bag ring seats on the basket or housing opening; a separate cover O-ring seals the pressure boundary.

© 2026 Kcmfilter

BAGS AND SUPPORT BASKETS

Compare Bag Sizes

Traditional bag-size groups differ in basket diameter, depth and filtration area. Ring geometry and retention remain part of the complete bag specification.

Bag Size	Depth in. (mm)	Diameter in. (mm)	Area ft² (m²)	Volume in³ (L)
Size #3	6 (152)	3.9 (99)	0.5 (0.046)	65 (1.1)
Size #4	12 (305)	3.9 (99)	1.0 (0.093)	130 (2.1)
Size #7	12 (305)	5.0 (127)	1.3 (0.121)	235 (3.9)
Size #8	18 (457)	5.0 (127)	2.0 (0.186)	350 (5.7)
Size #9	30 (762)	5.0 (127)	3.4 (0.316)	630 (10.3)
Size #1	15 (381)	6.7 (170)	2.3 (0.214)	500 (8.2)
Size #2	30 (762)	6.7 (170)	4.4 (0.409)	1,000 (16.4)

Bag dimensions and basket dimensions

Overall bag length, ring diameter and ring profile work together with the basket and housing seat. Basket withdrawal requires additional vertical space above the open vessel.

Top-entry Size 10 and Size 20

The gooseneck group uses Size 10 or Size 20 molded-ring bags. Its 232 psi (16 bar) configurations list a 6.75 in. (171.5 mm) basket diameter and 13.78 or 28.74 in. (350 or 730 mm) basket height. See the model tables on pages 15-16.

© 2026 Kcmfilter

COMPACT REFERENCE CONFIGURATIONS

Installation Dimensions

The three reference drawings show bottom, upper-side and lower-side outlet arrangements for compact #3/#4 housings.

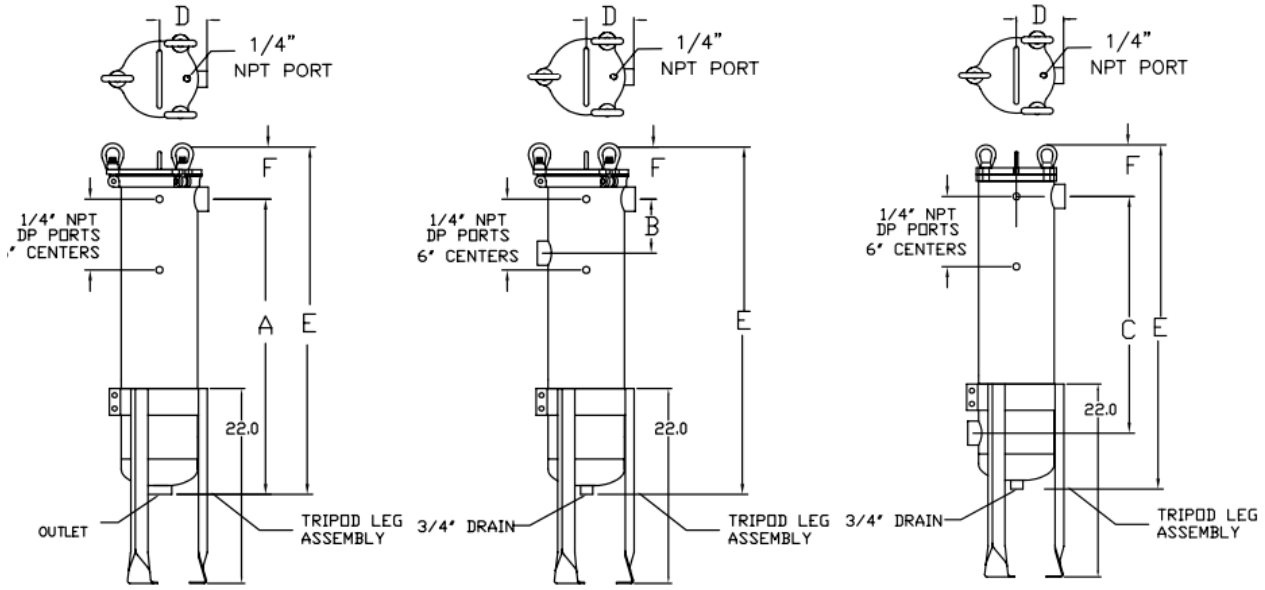

Bottom outlet **Upper-side outlet** **Lower-side outlet**

Bag Size	NPT	A	B	C	D	E	F
Size #3	1"	10.5 (266.7)	4.5 (114.3)	6 (152.4)	3.75 (95.2)	15.5 (393.7)	5.7 (144.8)
Size #4	1"	16.5 (419.1)	4.5 (114.3)	12 (304.8)	3.75 (95.2)	22.2 (563.9)	5.7 (144.8)
Size #4	2"	17.6 (447.0)	4.8 (121.9)	12 (304.8)	3.75 (95.2)	23.7 (602.0)	6.3 (160.0)

Reference dimensions: in. (mm). Letters follow the three layouts shown; the illustrated leg span is 22 in. (559 mm). These reference spans apply to the stated configuration.

© 2026 Kcmfilter

BAG SIZES #7, #8 AND #9

Mid-Size Installation

Compare basket depth and the reference housing spans. Overall installed height and nozzle elevations depend on the selected model and leg setting.

NOMINAL BASKET PROFILES

Depths: in. (mm); common scale

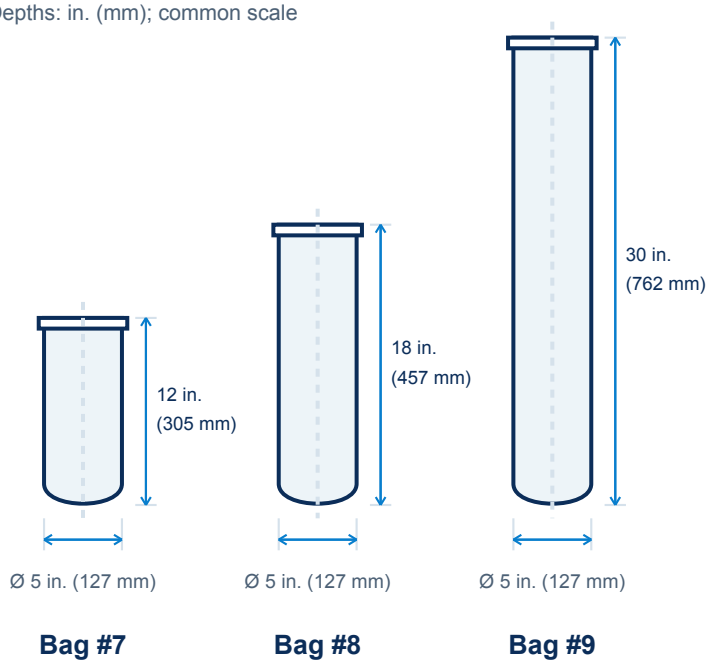

NPT REFERENCE SECTION

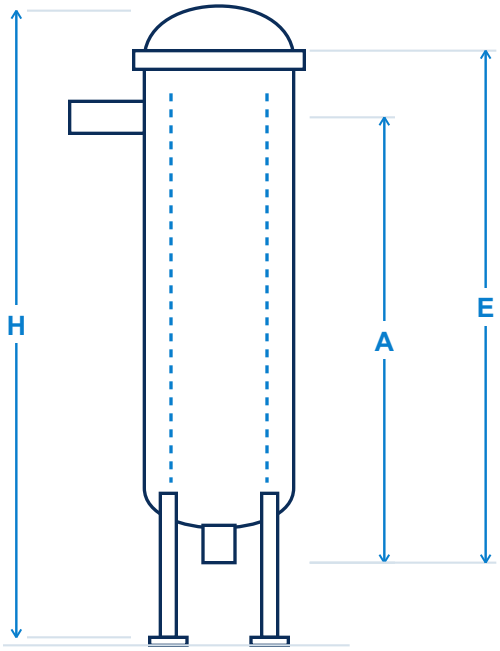

Reference section - not to scale

Selected 2 in. NPT / bottom-outlet reference configurations

KCM Model	Bag Size	Basket Ø x Depth in. (mm)	A in. (mm)	E in. (mm)
KCM-SB-S304-0024	#7	5.0 x 12 in. (127 x 305 mm)	19.6 (497.8)	25.7 (652.8)
KCM-SB-S304-0027	#8	5.0 x 18 in. (127 x 457 mm)	24 (609.6)	29.7 (754.4)
KCM-SB-S304-0030	#9	5.0 x 30 in. (127 x 762 mm)	33.6 (853.4)	39.7 (1008.4)

A and E follow the shown endpoints; E excludes leg projection. H denotes installed height. Basket withdrawal requires additional overhead space.

© 2026 Kcmfilter

BAG SIZES #1 AND #2

Standard-Size Installation

Compare basket depth and the reference housing spans. Overall installed height and nozzle elevations depend on the selected model and leg setting.

NOMINAL BASKET PROFILES

Depths: in. (mm); common scale

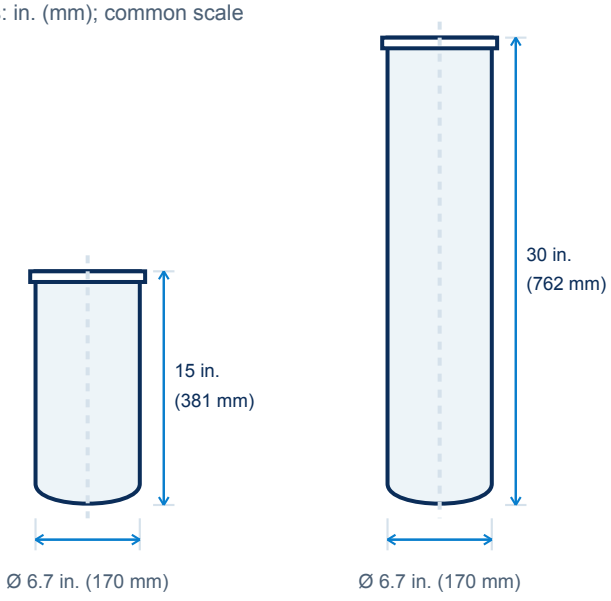

Bag #1 **Bag #2**

NPT REFERENCE SECTION

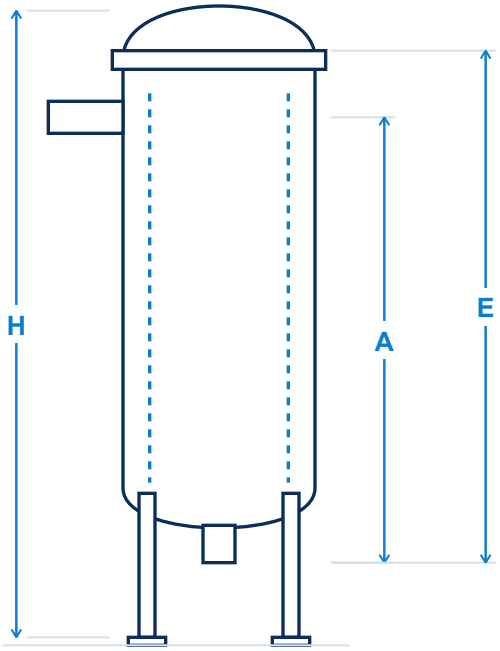

Reference section - not to scale

Selected 2 in. NPT / bottom-outlet reference configurations

KCM Model	Bag Size	Basket Ø x Depth in. (mm)	A in. (mm)	E in. (mm)
KCM-SB-S304-0038	#1	6.7 x 15 in. (170 x 381 mm)	20.438 (519.1)	27.268 (692.6)
KCM-SB-S304-0059	#2	6.7 x 30 in. (170 x 762 mm)	34.438 (874.7)	41.268 (1048.2)

A and E follow the shown endpoints; E excludes leg projection. H denotes installed height. Basket withdrawal requires additional overhead space.

© 2026 Kcmfilter

FLOW AND PRESSURE SELECTION

Size for the Process

Use the stated flow basis and pressure limit for each configuration. Match the housing and filter bag to the process duty.

Flow and pressure basis

State liquid, viscosity, density, temperature, normal and peak flow, media and solids loading. Select a pressure-drop curve for the exact housing, connection, basket and bag condition.

Configuration / KCM Model	Bag Size	Flow US gpm (m³/h)	Listed Pressure
Gooseneck	Size 10	88 US gpm (20 m³/h)	145 or 232 psi (10 or 16 bar)
Gooseneck	Size 20	198 US gpm (45 m³/h)	145 or 232 psi (10 or 16 bar)
KCM-SB-S316-0002	#1	88 US gpm (20 m³/h)	145 psi (10 bar)
KCM-SB-S316-0003 / 0004	#2	176 US gpm (40 m³/h)	145 psi (10 bar)
KCM-SB-S304-0106	#1	44-110 US gpm (10-25 m³/h)	145 psi (10 bar)
KCM-SB-S304-0107	#2	88-220 US gpm (20-50 m³/h)	145 psi (10 bar)

The S316-0002/0003/0004 flow figures are theoretical water-viscosity values and depend on the bag. S304-0106/0107 values are water-equivalent conversions at a density of 1,000 kg/m³, not tested clean-water ratings. Pressure ratings are vessel limits, not bag differential-pressure limits.

Pressure-drop data for your duty point

Clean-assembly pressure drop depends on the housing, connection, basket, filter bag, liquid temperature and viscosity. Vessel pressure limits and allowable bag differential pressure are separate selection criteria.

© 2026 Kcmfilter

TOP-ENTRY HOUSINGS

Gooseneck Inlet

A formed inlet delivers liquid through the cover area into the filter bag. These models use Size 10 or Size 20 molded-ring bags.



Closure and service

Swing-bolt closure, height-adjustable legs and a G1/4 cover port for a vent valve or pressure gauge.

Materials and finish

The listed housings use 304 or 316L stainless steel with an electropolished finish.

KCM 304 SS	KCM 316L SS	Bag Size	Pressure
KCM-SB-S304-0108	KCM-SB-S316L-0001	Size 10	145 psi (10 bar)
KCM-SB-S304-0109	KCM-SB-S316L-0002	Size 20	145 psi (10 bar)
KCM-SB-S304-0110	KCM-SB-S316L-0003	Size 10	232 psi (16 bar)
KCM-SB-S304-0111	KCM-SB-S316L-0004	Size 20	232 psi (16 bar)

2 in. (DN50) PN16 flanges. Operating temperature: -4 to 167°F (-20 to 75°C). The allowable envelope depends on the seal and operating pressure.

© 2026 Kcmfilter

SIZE 10 / SIZE 20

Basket and Body Data

Basket and body references for KCM-SB-S304-0110/0111 and KCM-SB-S316L-0003/0004 in the Size 10/20 gooseneck group.

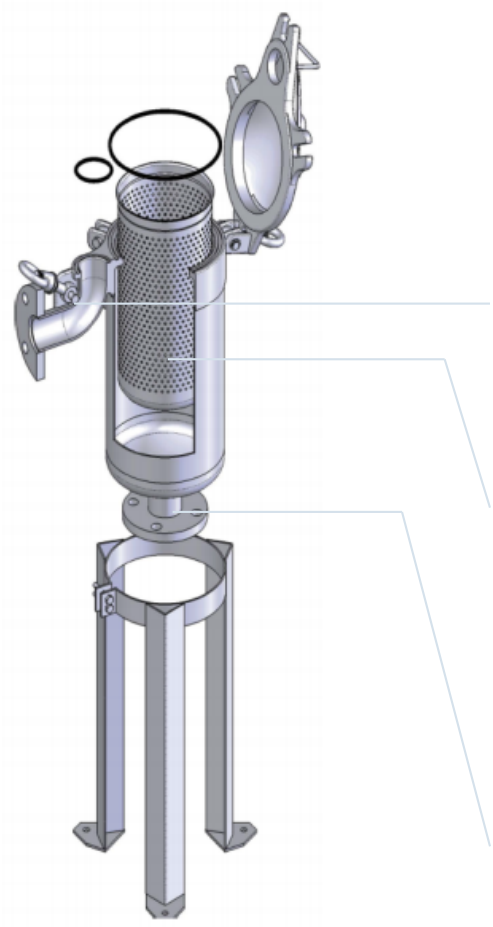

Reference exploded cutaway

Formed inlet

The inlet turns into the bag seating area beside the cover closure.

Bag, basket and seal

The open view shows the perforated support basket, bag seat and cover O-ring as separate components.

Bottom outlet

Allow room for the outlet flange, valves and connected pipework.

Bag Size	Basket Height / Ø in. (mm)	Body Ø in. (mm)	Volume / Mass
Size 10	13.78 / 6.75 (350 / 171.5)	8.50 (216)	4.23 US gal / 88 lb (16 L / approx. 40 kg)
Size 20	28.74 / 6.75 (730 / 171.5)	8.50 (216)	8.19 US gal / 106 lb (31 L / approx. 48 kg)

© 2026 Kcmfilter

TOP-ENTRY #1 / #2

Choose the Vessel Size

These two 304 stainless-steel models use standard bag sizes, swing-bolt covers and 2 in. (DN50) flanged connections. Listed pressure: 145 psi (10 bar).



Swing-Bolt Cover

The cover opens for access to the bag and basket. Vertical withdrawal space is required above the vessel.

EPDM cover seal

These two listed configurations use EPDM cover seals and have a stated 145 psi (10 bar) pressure limit.

KCM Model	Bag Size	Body Ø × H × Wall in. (mm)	Mass	Water-equivalent flow
KCM-SB-S304-0106	#1	8.62 × 25.59 × 0.118 (219 × 650 × 3)	66.1 lb (30 kg)	44-110 US gpm (10-25 m³/h)
KCM-SB-S304-0107	#2	8.62 × 40.16 × 0.118 (219 × 1020 × 3)	83.8 lb (38 kg)	88-220 US gpm (20-50 m³/h)

Flow conversion uses a density of 1,000 kg/m³. Actual volumetric flow scales inversely with liquid density. Body height is the shell dimension; use the installation drawing for overall height.

© 2026 Kcmfilter

BAGS, SEALS AND ACCESSORIES

Specify the Internals

Match replacement bags, baskets, seals and accessories to the selected KCM housing.

Filter bags

A bag specification combines media type, retention rating, dimensions and ring profile. Liquid chemistry, operating temperature and cleaning conditions determine suitable media.

Support and strainer baskets

A perforated basket supports a filter bag. Mesh-lined baskets provide straining at their stated opening size. Basket size, liner material and retaining hardware define the assembly.

Cover seals

Buna-N, EPDM and FKM cover seals are listed in the selected model tables. PTFE-encapsulated and PTFE-coated FKM are distinct constructions, specified separately for replacement orders.

Vent, drain and instruments

Vent and drain valves, pressure gauges and differential-pressure measurement use their stated port connections and instrument ranges. DP Gauge Ports measure pressure across the filter assembly.

Magnetic inserts

Magnetic inserts and scrapers require a matched bag-ring profile, basket dimensions and retention method. Include the required liquid duty and particle type with the accessory inquiry.

© 2026 Kcmfilter

SELECTION AND ORDERING

Ordering Guide

Choose a complete part number from the model tables. Use the fields below to define the application and the required supply configuration.

Selection Dimension	Information to Specify
Bag Size	#1, #2, #3, #4, #7, #8, #9; molded-ring Size 10 or Size 20
Housing material	Aluminum, carbon steel, 304 SS, 316 SS or 316L SS
Piping and connection	Bottom, side, universal, loop, in-line or top entry; NPT or flanged connections
Pressure and temperature	Use the listed pressure for the exact model; state operating and design conditions
Cover seal	Buna-N, EPDM, FKM or the specified PTFE-encapsulated FKM construction
Construction details	Closure, gauge ports, support-leg material, basket type and service clearance
Project documents	Drawing, inspection records and any required design-code documentation

Read the selection differences

An axial bottom outlet and a lower-side outlet require different pipework. DP denotes differential-pressure gauge ports; SS support legs and mesh-lined baskets are listed separately where fitted.

Example: a complete listed configuration

KCM-SB-S304-0051

#2 bag | 304 SS | 2 in. (DN50) flange | Buna-N | 150 psi (10.3 bar) | axial bottom outlet + DP ports

Use the complete listed part number; request project changes with your inquiry.

© 2026 Kcmfilter

SELECTED MODEL TABLES / #3 AND #4

Compact Bag Sizes

Compare the listed pressure and selection differences. Each blue part number opens its exact product page.

KCM Part Number	Bag Size	Housing	Connection	Seal	Listed Pressure	Selection Difference
KCM-SB-AL-0001	Size #4	Aluminum	1 in. NPT	Buna-N	150 psi (10.3 bar)	Axial bottom Without DP ports
KCM-SB-AL-0003	Size #4	Aluminum	1 in. NPT	Buna-N	300 psi (20.7 bar)	Lower-side outlet Without DP ports
KCM-SB-AL-0004	Size #4	Aluminum	1 in. NPT	Buna-N	300 psi (20.7 bar)	Lower-side outlet DP ports
KCM-SB-CS-0018	Size #4	Carbon Steel	2 in. NPT	Buna-N	300 psi (20.7 bar)	Axial bottom DP ports
KCM-SB-S304-0017	Size #4	304 SS	1 in. NPT	Buna-N	300 psi (20.7 bar)	Side outlet DP ports
KCM-SB-S304-0021	Size #4	304 SS	2 in. NPT	Buna-N	300 psi (20.7 bar)	Side outlet DP ports
KCM-SB-S316-0020	Size #4	316 SS	1 in. NPT	Buna-N	300 psi (20.7 bar)	Side outlet DP ports
KCM-SB-S316-0024	Size #3	316 SS	1 in. NPT	Buna-N	300 psi (20.7 bar)	Side outlet DP ports

Aluminum models use swing-bolt covers. The carbon-steel and stainless-steel reference configurations use hinged swing-bolt covers. DP = differential-pressure gauge ports.

© 2026 Kcmfilter

SELECTED MODEL TABLES / #7, #8 AND #9

Mid-Size Bag Housings

Compare the listed pressure and selection differences. Each blue part number opens its exact product page.

KCM Part Number	Bag Size	Housing	Connection	Seal	Listed Pressure	Selection Difference
KCM-SB-S304-0024	Size #7	304 SS	2 in. NPT	Buna-N	150 psi (10.3 bar)	Axial bottom DP ports
KCM-SB-S304-0025	Size #8	304 SS	1 in. NPT	FKM	150 psi (10.3 bar)	Side outlet DP ports
KCM-SB-S304-0026	Size #8	304 SS	1 in. NPT	FKM	150 psi (10.3 bar)	Side outlet SS support legs
KCM-SB-S304-0027	Size #8	304 SS	2 in. NPT	Buna-N	150 psi (10.3 bar)	Axial bottom SS support legs
KCM-SB-S304-0029	Size #8	304 SS	2 in. NPT	FKM	150 psi (10.3 bar)	Side outlet DP ports
KCM-SB-S304-0030	Size #9	304 SS	2 in. NPT	FKM	150 psi (10.3 bar)	Axial bottom DP ports

SS support legs distinguish the listed leg variants. Other shown reference configurations use the standard support-leg arrangement. DP = differential-pressure gauge ports.

© 2026 Kcmfilter

SELECTED MODEL TABLES / #1 AND #2

Standard Bag Housings

Compare the listed pressure and selection differences. Each blue part number opens its exact product page.

KCM Part Number	Bag Size	Housing	Connection	Seal	Listed Pressure	Selection Difference
KCM-SB-S304-0033	Size #1	304 SS	1 in. NPT	Buna-N	150 psi (10.3 bar)	Axial bottom DP ports
KCM-SB-S304-0037	Size #1	304 SS	2 in. NPT	Buna-N	150 psi (10.3 bar)	Axial bottom 60-mesh basket
KCM-SB-S304-0038	Size #1	304 SS	2 in. NPT	Buna-N	150 psi (10.3 bar)	Axial bottom DP ports
KCM-SB-S304-0039	Size #1	304 SS	2 in. NPT	Buna-N	150 psi (10.3 bar)	Axial bottom SS support legs
KCM-SB-S304-0040	Size #1	304 SS	2 in. NPT	PTFE-encap. FKM	150 psi (10.3 bar)	Axial bottom DP ports
KCM-SB-S316-0002	Size #1	316 SS	2 in. (DN50) Flange	Buna-N	145 psi (10 bar)	Side inlet Bottom outlet
KCM-SB-S304-0051	Size #2	304 SS	2 in. (DN50) Flange	Buna-N	150 psi (10.3 bar)	Axial bottom DP ports
KCM-SB-S304-0052	Size #2	304 SS	2 in. (DN50) Flange	Buna-N	150 psi (10.3 bar)	Side outlet DP ports
KCM-SB-S304-0053	Size #2	304 SS	2 in. (DN50) Flange	Buna-N	150 psi (10.3 bar)	Lower-side outlet DP ports
KCM-SB-S304-0059	Size #2	304 SS	2 in. NPT	Buna-N	150 psi (10.3 bar)	Axial bottom DP ports
KCM-SB-S304-0060	Size #2	304 SS	2 in. NPT	Buna-N	150 psi (10.3 bar)	Side outlet DP ports
KCM-SB-S304-0061	Size #2	304 SS	2 in. NPT	FKM	150 psi (10.3 bar)	Side outlet DP ports
KCM-SB-S316-0003	Size #2	316 SS	2 in. (DN50) Flange	Buna-N	145 psi (10 bar)	Side inlet Bottom outlet
KCM-SB-S316-0004	Size #2	316 SS	2 in. NPT	Buna-N	145 psi (10 bar)	Side inlet Bottom outlet

Axial bottom and lower-side outlets have different nozzle positions. Mesh-lined baskets and SS support legs distinguish variants with the same bag size and connection. DP = differential-pressure gauge ports.

© 2026 Kcmfilter

SELECTED MODEL TABLES / UNIVERSAL, LOOP AND IN-LINE

Alternative Pipe Layouts

Compare the listed pressure and selection differences. Each blue part number opens its exact product page.

KCM Part Number	Bag Size	Housing	Connection	Seal	Listed Pressure	Selection Difference
KCM-SB-S304-0043	Size #1	304 SS	2 in. NPT	Buna-N	150 psi (10.3 bar)	Universal ports DP ports
KCM-SB-S304-0064	Size #2	304 SS	2 in. NPT	Buna-N	150 psi (10.3 bar)	Universal ports 20-mesh basket
KCM-SB-S304-0065	Size #2	304 SS	2 in. NPT	Buna-N	150 psi (10.3 bar)	Universal ports DP ports
KCM-SB-S304-0067	Size #2	304 SS	2 in. NPT	FKM	150 psi (10.3 bar)	Universal ports DP ports
KCM-SB-S304-0079	Size #2	304 SS	3 in. NPT	Buna-N	150 psi (10.3 bar)	Universal ports DP ports
KCM-SB-S316-0038	Size #2	316 SS	2 in. NPT	Buna-N	150 psi (10.3 bar)	Universal ports DP ports
KCM-SB-S304-0002	Size #1	304 SS	2 in. (DN50) Flange	Buna-N	145 psi (10 bar)	Opposed ports In-line layout
KCM-SB-S304-0003	Size #1	304 SS	2 in. (DN50) Flange	Buna-N	145 psi (10 bar)	Same-side ports Loop layout
KCM-SB-S304-0014	Size #2	304 SS	3 in. (DN80) Flange	Buna-N	145 psi (10 bar)	Opposed ports In-line layout
KCM-SB-S304-0015	Size #2	304 SS	3 in. (DN80) Flange	Buna-N	145 psi (10 bar)	Same-side ports Loop layout
KCM-SB-S316-0006	Size #1	316 SS	2 in. (DN50) Flange	Buna-N	145 psi (10 bar)	Opposed ports In-line layout
KCM-SB-S316-0007	Size #1	316 SS	2 in. (DN50) Flange	Buna-N	145 psi (10 bar)	Same-side ports Loop layout
KCM-SB-S316-0018	Size #2	316 SS	3 in. (DN80) Flange	Buna-N	145 psi (10 bar)	Opposed ports In-line layout
KCM-SB-S316-0019	Size #2	316 SS	3 in. (DN80) Flange	Buna-N	145 psi (10 bar)	Same-side ports Loop layout

Universal ports provide alternative outlet positions. Loop ports are on the same side; in-line ports are opposed. Port positions and unused-port closures form part of the installation layout.

© 2026 Kcmfilter

SELECTED MODEL TABLES / #1 / #2 AND SIZE 10 / 20

Top-Entry Housings

Compare the listed pressure and selection differences. Each blue part number opens its exact product page.

KCM Part Number	Bag Size	Housing	Connection	Seal	Listed Pressure	Selection Difference
KCM-SB-S304-0106	Size #1	304 SS	2 in. (DN50) Flange	EPDM	145 psi (10 bar)	Top inlet Standard bag
KCM-SB-S304-0107	Size #2	304 SS	2 in. (DN50) Flange	EPDM	145 psi (10 bar)	Top inlet Standard bag
KCM-SB-S304-0108	Size 10	304 SS	2 in. (DN50) Flange	EPDM	145 psi (10 bar)	Gooseneck inlet Molded-ring bag
KCM-SB-S304-0109	Size 20	304 SS	2 in. (DN50) Flange	EPDM	145 psi (10 bar)	Gooseneck inlet Molded-ring bag
KCM-SB-S304-0110	Size 10	304 SS	2 in. (DN50) Flange	EPDM	232 psi (16 bar)	Gooseneck inlet Molded-ring bag
KCM-SB-S304-0111	Size 20	304 SS	2 in. (DN50) Flange	EPDM	232 psi (16 bar)	Gooseneck inlet Molded-ring bag
KCM-SB-S316L-0001	Size 10	316L SS	2 in. (DN50) Flange	EPDM	145 psi (10 bar)	Gooseneck inlet Molded-ring bag
KCM-SB-S316L-0002	Size 20	316L SS	2 in. (DN50) Flange	EPDM	145 psi (10 bar)	Gooseneck inlet Molded-ring bag
KCM-SB-S316L-0003	Size 10	316L SS	2 in. (DN50) Flange	EPDM	232 psi (16 bar)	Gooseneck inlet Molded-ring bag
KCM-SB-S316L-0004	Size 20	316L SS	2 in. (DN50) Flange	EPDM	232 psi (16 bar)	Gooseneck inlet Molded-ring bag

All models shown use swing-bolt covers and 2 in. (DN50) flanged connections. Size 10/20 gooseneck models use PN16 flanges and their specified molded-ring bags.

© 2026 Kcmfilter

SALES INQUIRY

Request a Quote

Send the selected KCM part number, quantity and application details for a supply quotation.

Part number and quantity

Include the KCM model, quantity and any installation drawing or piping sketch.

Liquid and duty

State liquid, viscosity, density, normal and peak flow, operating temperature and expected solids loading.

Pressure and filtration

Include operating and design pressure, allowable pressure drop, and bag size, ring profile, media and micron rating.

Piping and documents

Specify connections, port orientation, material, seal, service clearance, accessories and required documents.

Published specifications apply to the configurations and operating conditions stated in this brochure; final supply is defined by the agreed quotation and approved drawings.

Contact Kcmfilter
sales@kcmfilter.com

View KCM-SB Range
+1 (934) 234-9228

© 2026 Kcmfilter